INSTRUCTION MANUAL

Publication No. 980810

1255A

SWITCH SYSTEM

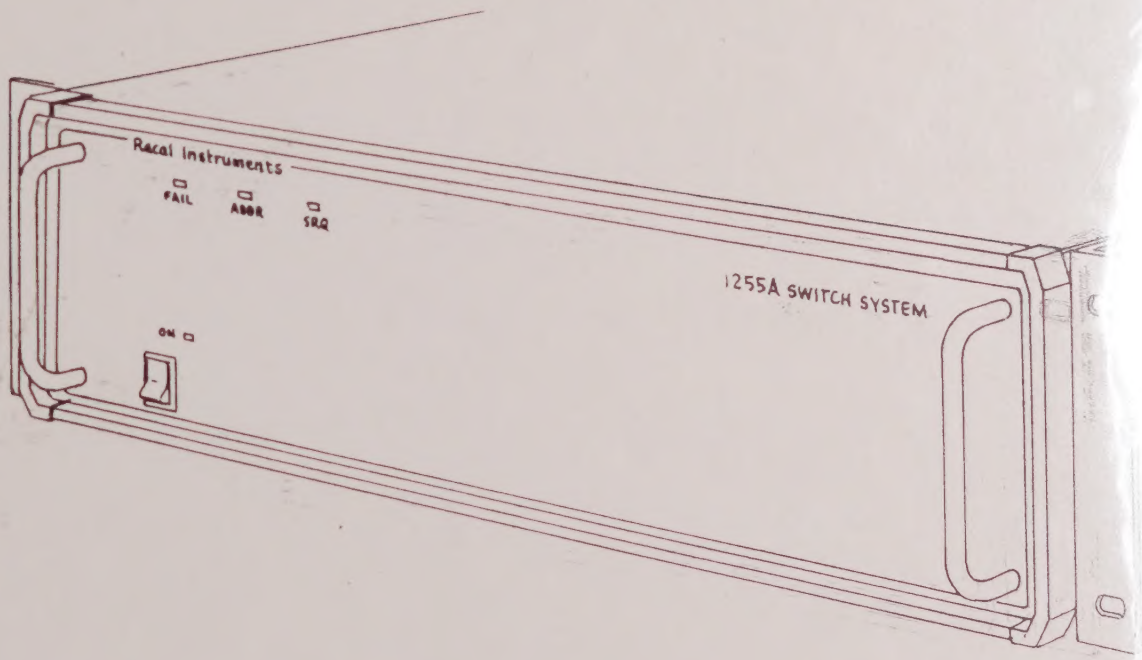

Racal Instruments

MP MASTER
MA33380

RACAL

Digitized by the Internet Archive
in 2025

https://archive.org/details/manualsplus_09489

INSTRUCTION MANUAL

1255A

ENHANCED SWITCH SYSTEM

Publication No. 980810

RACAL INSTRUMENTS

Racal Instruments, Inc.
4 Goodyear St., Irvine, CA 92618-2002
Tel: (800) RACAL-ATE, (800) 722-2528, (714) 859-8999; FAX: (714) 859-7139

Racal Instruments, Ltd.
480 Bath Road, Slough, Berkshire, SL1 6BE, United Kingdom
Tel: +44 (0) 1628 604455; FAX: +44 (0) 1628 662017

Racal Systems Electronique S.A.
18 Avenue Dutartre, 78150 LeChesnay, France
Tel: +33 (1) 3955 8888; FAX: +33 (1) 3955 6735

Racal Systems Elettronica Srl.
Strada 2-Palazzo C4, 20090 Milanofiori Assago, Milan, Italy
Tel: +39 (2) 5750 1796; FAX +39 (2) 5750 1828

Racal Elektronik System GmbH.
Frankenforster Strasse 21, 51427 Bergisch-Gladbach 1, Germany
Tel:+49 2204 92220; FAX: +49 2204 21491

Racal Australia Pty. Ltd.
3 Powells Road, Brookvale, NSW 2100, Australia
Tel: +61 (2) 9936 7000, FAX: +61 (2) 9936 7036

Racal Electronics Pte. Ltd.
26 Ayer Rajah Crescent, 04-06/07 Ayer Rajah Industrial Estate, Singapore 0513.
Tel: +65 7792200, FAX: +65 7785400

Racal Instruments, Ltd.
Sun House 13th Floor, 181 Des Voeux Road, Central, Hong Kong
Tel: +852 281 58633, FAX +852 281 58141

RACAL

PUBLICATION DATE: NOVEMBER 1997

Copyright © 1997 by Racal Instruments, Inc. Printed in the United States of America. All rights reserved. This book or parts thereof may not be reproduced in any form without written permission of the publisher.

WARRANTY STATEMENT

Products sold by Racal Instruments, Inc. are warranted to be free from defects in workmanship or materials. Racal Instruments, Inc. will, at its option, either repair or replace any hardware products which prove to be defective during the warranty period. You are a valued customer. Our mission is to make any necessary repairs in a reliable and timely manner.

Duration of Warranty

The warranty period for all Racal Instruments, Inc. hardware is three years, except software and firmware products designed for use with Racal Instruments, Inc. Hardware are warranted not to fail to execute their programming instructions due to defect in materials or workmanship for a period of ninety (90) days from the date of delivery to the initial end user.

Return of Product

Authorization is required from Racal Instruments before you send us your product for service or calibration. Call your nearest Racal Instruments support facility. A list is located on the last page of this manual. If you are unsure where to call, contact Racal Instruments, Inc. Customer Support Help Desk in Irvine, California, USA at 1-800-722-3262 or 1-714-859-8999 or via fax at 1-714-859-7309. We can be reached at: helpdesk@racalate.com.

Limitation of Warranty

Racal Instruments, Inc. shall be released from all obligations under this warranty in the event repairs or modifications are made by persons other than authorized Racal Instruments service personnel or without the written consent of Racal Instruments.

Racal Instruments, Inc. expressly disclaims any liability to its customers, dealers and representatives and to users of its product, and to any other person or persons, for special or consequential damages of any kind and from any cause whatsoever arising out of or in any way connected with the manufacture, sale, handling, repair, maintenance, replacement or use of said products.

Representations and warranties made by any person including dealers and representatives of Racal Instruments, Inc., which are inconsistent or in conflict with the terms of this warranty (including but not limited to the limitations of the liability of Racal Instruments, Inc. as set forth above), shall not be binding upon Racal Instruments, Inc. unless reduced to writing and approved by an officer of Racal Instruments, Inc.

Except as stated above, Racal Instruments, Inc. makes no warranty, express or implied (either in fact or by operation of law), statutory or otherwise; and except to the extent stated above, Racal Instruments, Inc. shall have no liability under any warranty, express or implied (either in fact or by operation of law), statutory or otherwise.

PROPRIETARY NOTICE

This document and the technical data herein disclosed, are proprietary to Racal Instruments, and shall not, without express written permission of Racal Instruments, be used, in whole or in part to solicit quotations from a competitive source or used for manufacture by anyone other than Racal Instruments. The information herein has been developed at private expense, and may only be used for operation and maintenance reference purposes or for purposes of engineering evaluation and incorporation into technical specifications and other documents which specify procurement of products from Racal Instruments.

FOR YOUR SAFETY

Before undertaking any troubleshooting, maintenance or exploratory procedure, read carefully the **WARNING** and **CAUTION** notices.

This equipment contains voltage hazardous to human life and safety, and is capable of inflicting personal injury.

If this instrument is to be powered from the AC line (mains) through an autotransformer, ensure the common connector is connected to the neutral (earthed pole) of the power supply.

Before operating the unit, ensure the conductor (green wire) is connected to the ground (earth) conductor of the power outlet. Do not use a two-conductor extension cord or a three-prong/two-prong adaptor. This will defeat the protective feature of the third conductor in the power cord.

Maintenance and calibration procedures sometimes call for operation of the unit with power applied and protective covers removed. Read the procedures and heed warnings to avoid "live" circuit points.

Before operating this instrument:

1. Ensure the instrument is configured to operate on the voltage at the power source. See Installation Section.

2. Ensure the proper fuse is in place for the power source to operate.

3. Ensure all other devices connected to or in proximity to this instrument are properly grounded or connected to the protective third-wire earth ground.

If the instrument:

- fails to operate satisfactorily
- shows visible damage
- has been stored under unfavorable conditions
- has sustained stress

Do not operate until performance is checked by qualified personnel.

Racal Instruments

EC Declaration of Conformity

We

Racal Instruments Inc.
4 Goodyear Street
Irvine, CA 92718

declare under sole responsibility that the

1255A Switch System
P/N 407604

Conforms to the following Product Specifications:

Safety: EN 61010-1

EMC: CISPR 11:1990/EN 55011 (1991): Group 1 Class A
IEC 801-2:1991/EN 50082-1 (1992): 4 kV CD, 8 kV AD
IEC 801-3:1984/EN 50082-1 (1992): 3 V/m, 27-500 MHz
IEC 801-4:1988/EN 50082-1 (1992): 1 kV

The product herewith complies with the requirements of the Low Voltage Directive 73/23/EEC and the EMC Directive 89/336/EEC.

Irvine, CA, November 17, 1997

Quality Manager

Amendment to
Racal Instrument Models 1255 and 1255A
Publication No's 980771 and 980810
December 1, 1997

1. On the CPU Assembly, P/N 405097

   a. Change Z3 part number from 080076 to 080069. Description is: Resistor Network, Cermet, 2.2K, 6P3R, FSC 71450, Manufacturer's part number 750-63-R2.2KΩ.

   b. Change Revision to "E".

2. On the CPU Assembly Schematic, P/N 435097

   a. Sheet 1, Change Z3C to 2.2K.

   b. Sheet 3, Change Z3A and Z3B to 2.2K.

   c. Change Revision to "C".

SYMBOL LEGEND

Symbol	Publication	Description
	IEC 417, No. 5032	Alternating current
	IEC 417, No. 5017	Earth (ground) Terminal
	IEC 417, No. 5019	Protective Conductor Terminal
	IEC 417, No. 5020	Frame or Chassis Terminal
	IEC 417, No. 5007	On (Supply)
	IEC 417, No. 5008	Off (Supply)
	ISO 3864, No. B.3.1	Caution (refer to manual)

TABLE OF CONTENTS

Overview

Items Shipped With The 1255A 1-1
Functional Description 1-1
Features 1-1
Ease-Of-Use 1-1
Powerful Software 1-6
Easy Maintenance 1-6

Getting Started

Installation and Setup 2-1
Main AC Power 2-1
Switch Module Configuration Switches 2-3
Installing The Switch Modules 2-4
Connecting The GPIB Interface 2-4
Basic GPIB Information 2-4
GPIB Cabling Guidelines 2-5
Connecting The Cables 2-5
Setting The GPIB Address 2-5
Connecting The RS-232 Interface 2-7
Connecting To a Computer or Data Terminal 2-7
Connecting To a Modem 2-7
Setting The RS-232 Mode 2-7
Setting The Flow Control Method 2-7
Setting The Echo-Back Options 2-8
Setting The Baud Rate 2-9
Setting Other Parameters 2-9
Connecting The External Trigger and Sync Output 2-12
Switch Module Connections 2-12
Communicating With The Switch System 2-14
Activating Main AC Power 2-14
Switch System Self-Test 2-14
Sending Commands To The Switch System 2-14
Resetting The Switch Modules 2-16
Commands To Verify Presence of Switch Modules 2-16
Closing a Relay 2-17
Opening a Relay 2-17
Installing The Optional Slide Mount Kit 2-17

Using The Switch System

Communication Guidelines 3-1
Input Format 3-1
Output Format 3-1
GPIB Serial Poll Status Byte 3-3
Reading Error Messages 3-3
Basic Operations and Commands 3-5
Introduction 3-5
Checking For Installed Modules 3-5
Resetting The Switch Modules 3-6
More About Closing Relays 3-6

More About Opening Relays 3-7
Using SETUP To Control Switching Sequence 3-7
Using EQUATE To Group Switches 3-8
Using Exclude Lists 3-9
Using SYNC With External Instruments 3-11
Using Scan Lists and The External Trigger 3-11
Asserting SRQ 3-12
Using Confidence Mode 3-13
Controlling The GPIB EOI Line 3-14
Saving Configurations in Non-Volatile Storage 3-15
In Case of Trouble 3-16

Command Reference

Introduction 4-1
Syntax Notations and Conventions 4-1
CLOSE 4-2
CNF 4-3
DLY 4-4
EOI 4-5
EQUATE 4-6
EXCL 4-8
OPEN 4-10
PDATAOUT 4-11
PSETUP 4-13
PUPRCL 4-14
RECALL 4-15
RESET 4-16
SCAN 4-17
SETUP 4-19
SHS 4-20
SLIST 4-21
SRQMASK 4-25
STORE 4-27
SYNC 4-28
TEST 4-29
TTLTRG 4-31
YERR 4-32

Error Messages

Error Messages 5-1

Maintenance

Introduction 6-1
Calibration 6-1
Performance Verification 6-1
Introduction 6-1
Power Supply Assembly 6-2
Required Equipment 6-2
Setup 6-2
Procedure 6-2
Fan Test 6-2
DC Supply Voltage 6-3
Ripple Voltage 6-3

Test Completion 6-4
CPU Assembly 6-4
Required Equipment 6-4
Reference Documentation 6-4
Setup 6-4
Procedure 6-5
Self-Test 6-5
GPIB Interface 6-5
Local Bus 6-5
RS-232 Interface 6-5
External Sync 6-6
External Trigger 6-7
Test Completion 6-7
Final Assembly 6-8
Required Equipment 6-8
Setup 6-8
Procedure 6-9
Self-Test 6-9
GPIB Interface 6-9
Local Bus 6-9
RS-232 Interface 6-9
External Sync 6-10
External Trigger 6-11
Test Completion 6-11
Drawings 6-12
Parts List 6-35

Customer Support

Customer Support 7-1
Reshipment Instructions 7-1

Support Offices

Support Offices 8-1

Appendix A

Specifications A-1
General A-1
Electrical Power A-2
Mechanical A-2
Environmental A-2

Appendix B

Theory of Operation B-1
Power Supply Assembly B-1
Backplane Assembly B-1
CPU Assembly B-2
Reset/Voltage Monitor B-3
Microprocessor B-4
Address Decoder B-4
Interrupt Encoder B-5
Static RAM B-5
Erasable Programmable Read-Only Memory (EPROM) B-5
Non-Volatile RAM B-6

GPIB Interface B-6
DUART/Timer B-6
GPIB Configuration Switch B-7
External Trigger Conditioner B-7
Discrete Input Register B-7
Discrete Output Register B-7
Local Bus Controller B-8

Appendix C
Installing the Optional Slide Mount Kit C-1

Appendix D
Troubleshooting D-1

Appendix E
Modules E-1

FIGURES

1-1 1255A Features, Front Panel 1-2
1-2 1255A Features, Rear Panel 1-3
1-3 General Features 1-4
1-4 Forward and Reverse Rack Mounting 1-5
1-5 Internal Layout and Signal Flow 1-7
1-6 Dimensions 1-8
2-1 Changing Fuse for Main AC Power 2-2
2-2 Setting Up The Switch Modules 2-3
2-3 Inserting a Switch Module 2-4
2-4 Using The GPIB Interface 2-6
2-5 Using The RS-232 Interface 2-10
2-6 Using The 1255A With a Modem 2-11
2-7 Using Sync Out and Trigger In 2-13
2-8 Activating Main AC Power 2-15
C-1 Slide-Mount Kit Components C-2
C-2 Assembling The Slide Mount C-3
C-3 Adjusting The Slide Mount C-4
C-4 Rear End Slide-Mount Rack Dimensions C-5
C-5 Front-Forward Rack Mounting C-6
C-6 Rear-Forward (Flush) Rack Mounting C-7
C-7 Rear-Forward (Recessed) Rack Mounting C-8

Items Shipped With The 1255A

The following items are shipped with each 1255A Switch System:

ITEM	RACAL PART NUMBER	QUANTITY
1255A Chassis Assembly	407608	1
Instruction Manual	980810	1
AC Power Mains Cable	600620	1
Rack Mounting Ears	456414	2
Screws for Rack Mounting Ears	615074	4
Blanking Plates (to cover empty module slots)	407428	3

The following accessories may be ordered separately:

- Option 65: Slide Mount Kit P/N 407404
- GPIB Cable, 1-meter P/N 406845
- GPIB Cable, 2-meter P/N 406844
- GPIB Cable, 4-meter P/N 406846
- RS-232 Cable, 10 ft. (9-pin female D-Sub to 9-pin male D-Sub) P/N 602248

Functional Description

The 1255A Enhanced Switch System is a 4-slot GPIB-programmable mainframe. It allows power, low-level, and RF signals to be switched in a single system. Switching is performed by Racal Instruments 1260-Series switch modules, up to four of which may be installed in the 1255A.

Features

Figures 1-1, 1-2, and **1-3** show the key features of the 1255A.

Ease-Of-Use

Several features have been designed into the 1255A to make it easy and convenient to use:

- **Fast Setup.** No switch settings or jumpers are needed for the 1255A backplane. There are no logical address, interrupt level, or local bus settings to bother with.

- **Command Set Commonality.** The 1255A is fully compatible with the command set of 1260-Series modules with the exception of the TTLTRG and SYNC commands, as detailed in **Section 4: Command Reference**.

- **Flexible Controller Interface.** The controller (host computer) may communicate with the 1255A using either GPIB or RS-232 interfaces.

- **Forward or Reverse Rack Mounting.** You may rack mount the 1255A for access to either the front panel or the switching modules (see **Figure 1-4**).

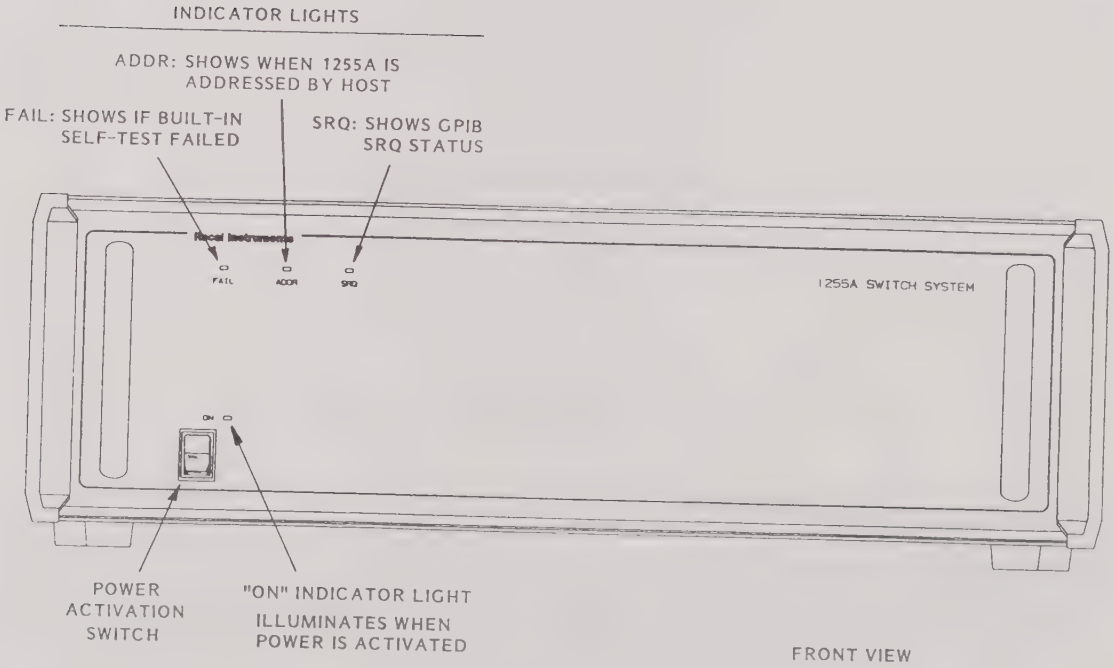

Figure 1-1 1255A Features, Front Panel

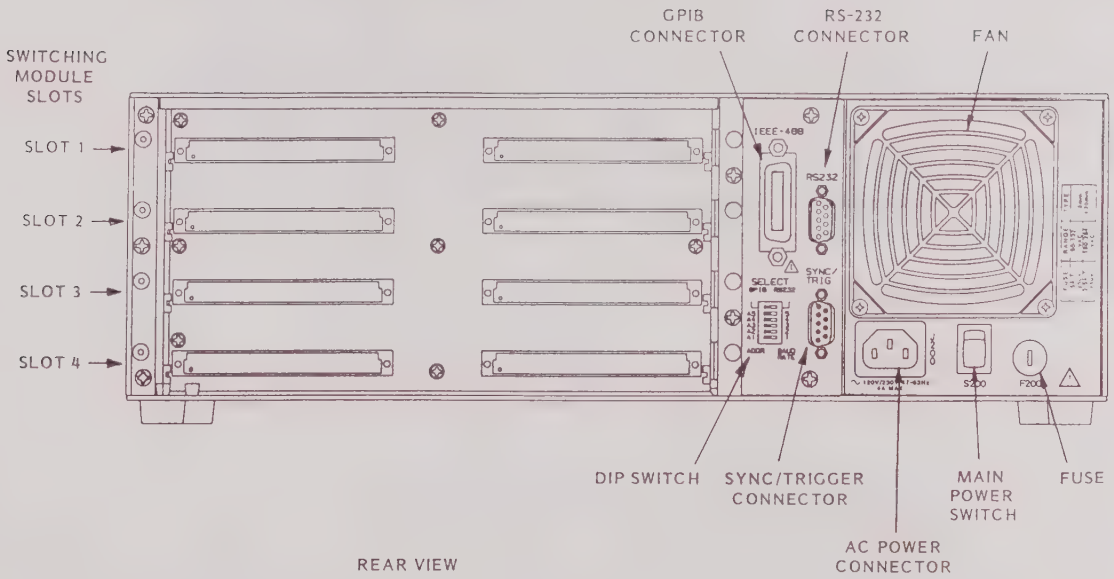

Figure 1-2 1255A Features, Rear Panel

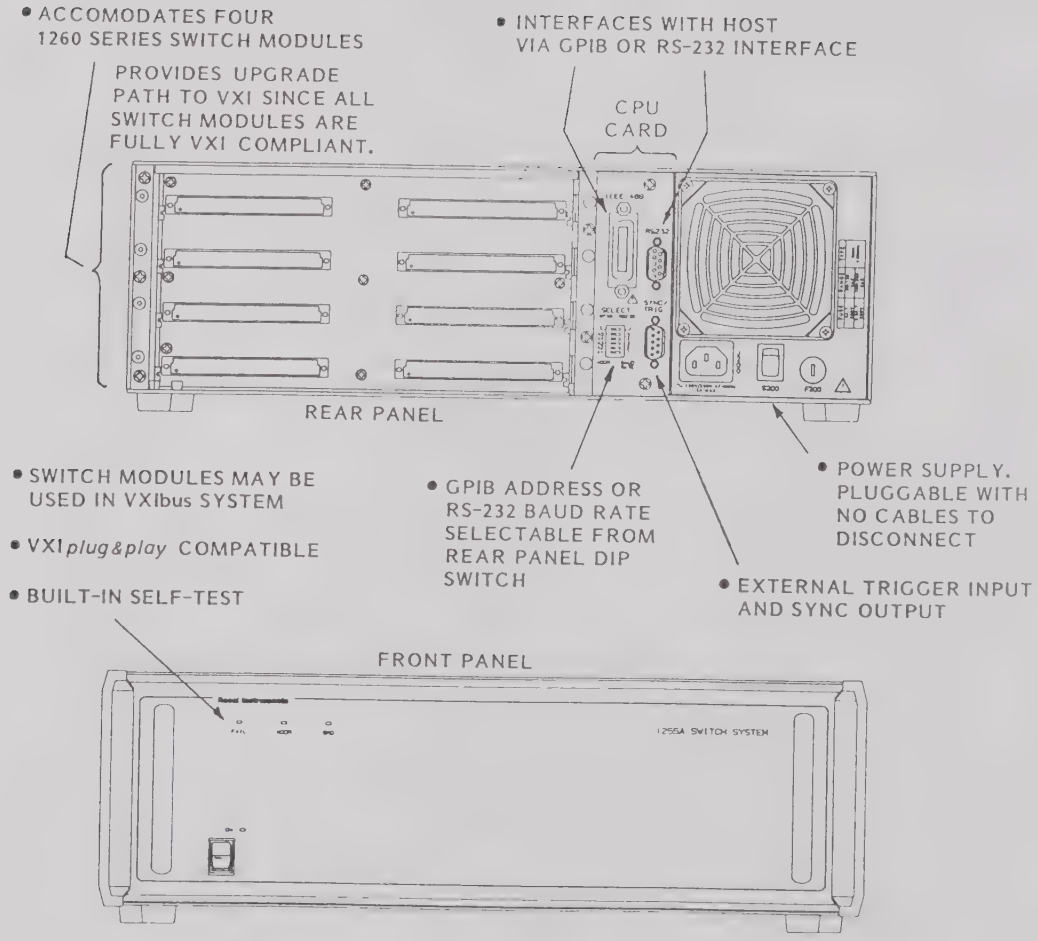

Figure 1-3 General Features

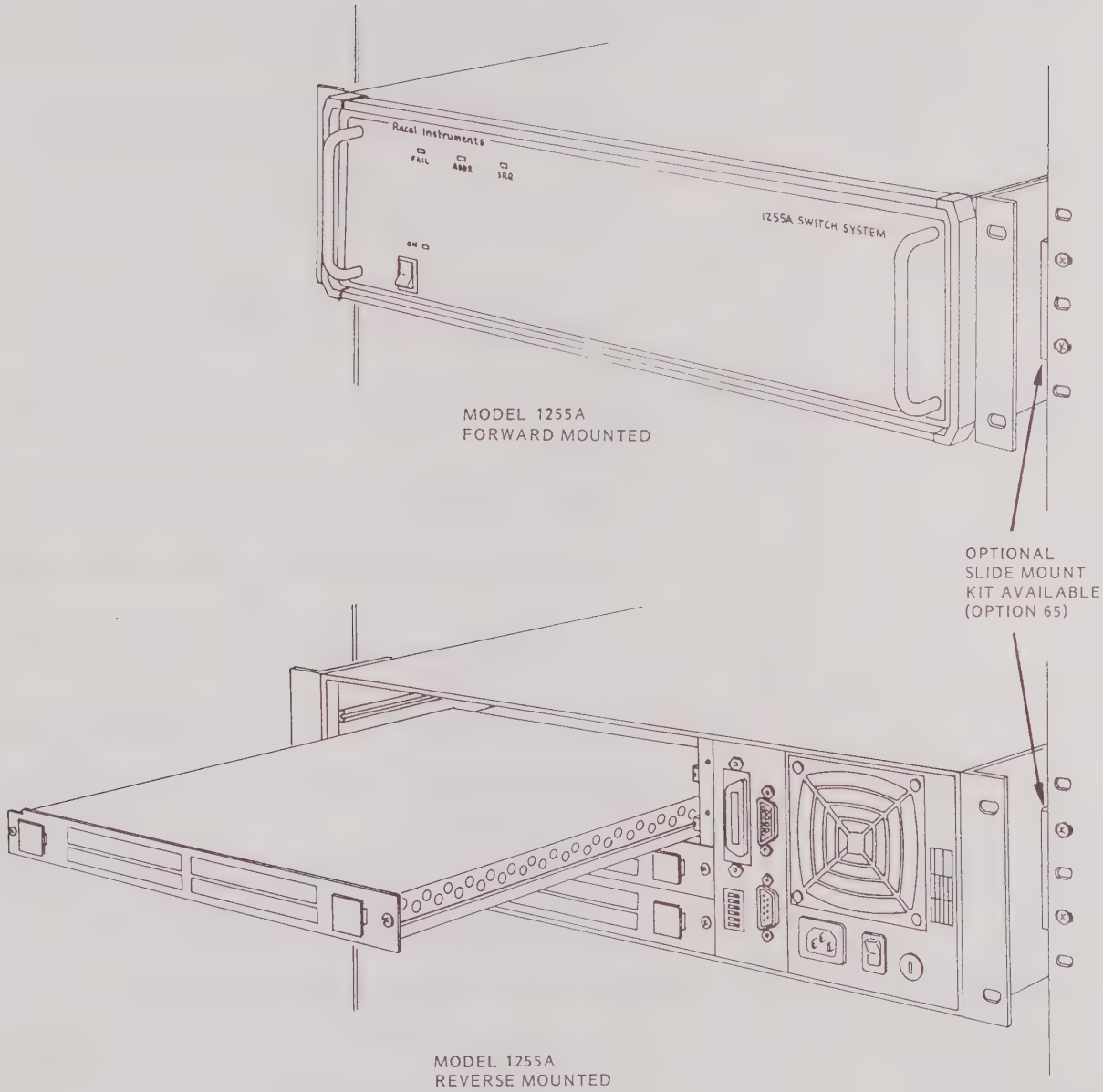

Figure 1-4 Forward and Reverse Rack Mounting

Powerful Software

Extensive software capabilities include:

- **Exclude Lists.** Allows you to prevent simultaneous closure of switches in a specified group.
- **Equate Lists.** Reduces programming effort. A command sent to one module is obeyed by all modules that are equated with it.
- **External Trigger.** Allows external device to trigger switching operations.
- **Scan Lists.** Allows you to specify a sequence of relay closures to step through in response to an external trigger source. A scan list may include relays on one module or multiple modules.
- **Synchronization.** Provides a sync pulse that can trigger an external device (such as a DMM) after the relay states have been modified.
- **Programmable Delay.** Allows you to specify the amount of time to delay from changing a relay state to sending a sync pulse.
- **Verification.** Allows you to verify the status of all switches and the controller.
- **Confidence Mode.** Automatically verifies correct application of voltage to relay coils.
- **Non-Volatile Memory.** Stores and recalls switch configurations.
- **Power-Up Recall.** Automatically recalls a complete switching system configuration from non-volatile memory at power-up.
- **Self Test.** Ensures that the system ROM, RAM, CPU, backplane, and switching module handshaking are functioning correctly. This test is executed automatically at power-up, and may also be invoked over the GPIB or RS-232 interfaces.

Easy Maintenance

Maintenance of the 1255A is streamlined through the use of:

- **Easy-Access Fan Filter.** No tools are required to remove and clean the fan filter.
- **Modular Assemblies.** Replacement time is minimal.
- **Pluggable Power Supply.** There are no cables to disconnect.
- **Option-65 Slide Mount Option.** Enhances safety and convenience when removing and installing the 1255A.

Also see **Figure 1.5: Internal Layout and Signal Flow**, and **Figure 1-6: Dimensions**.

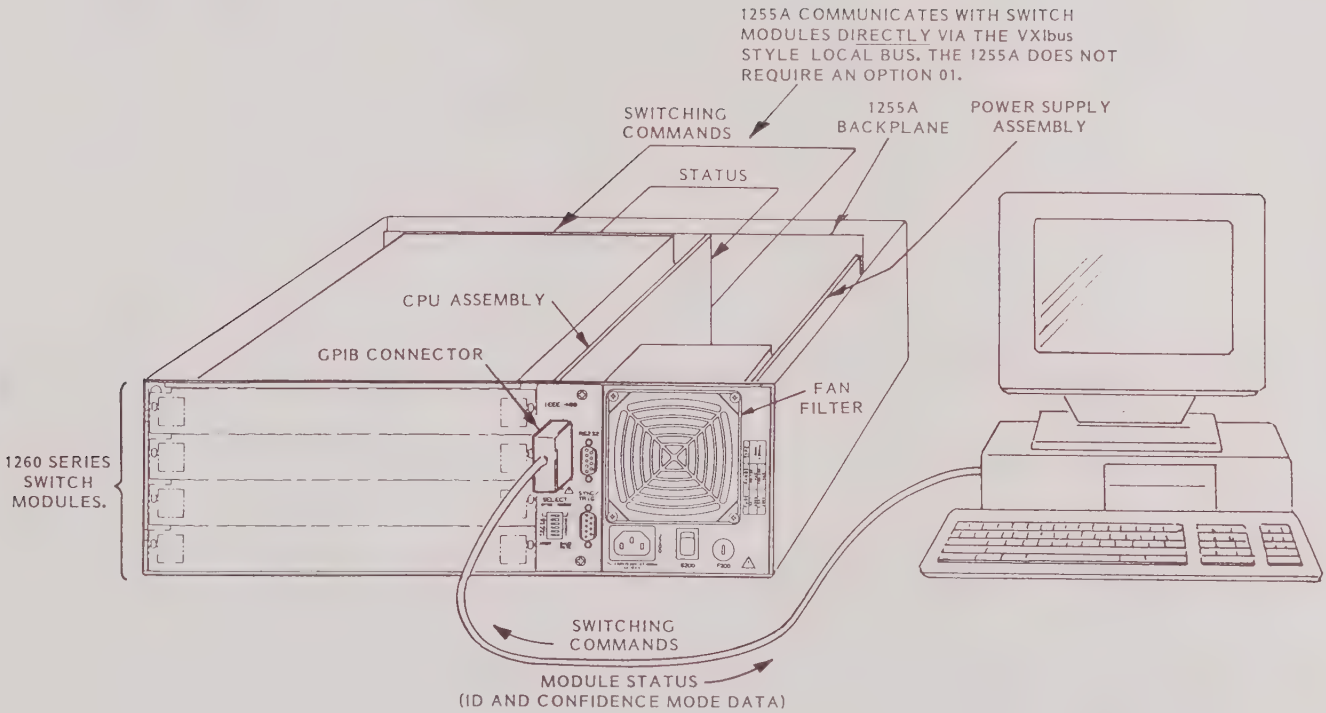

Figure 1-5 Internal Layout and Signal Flow

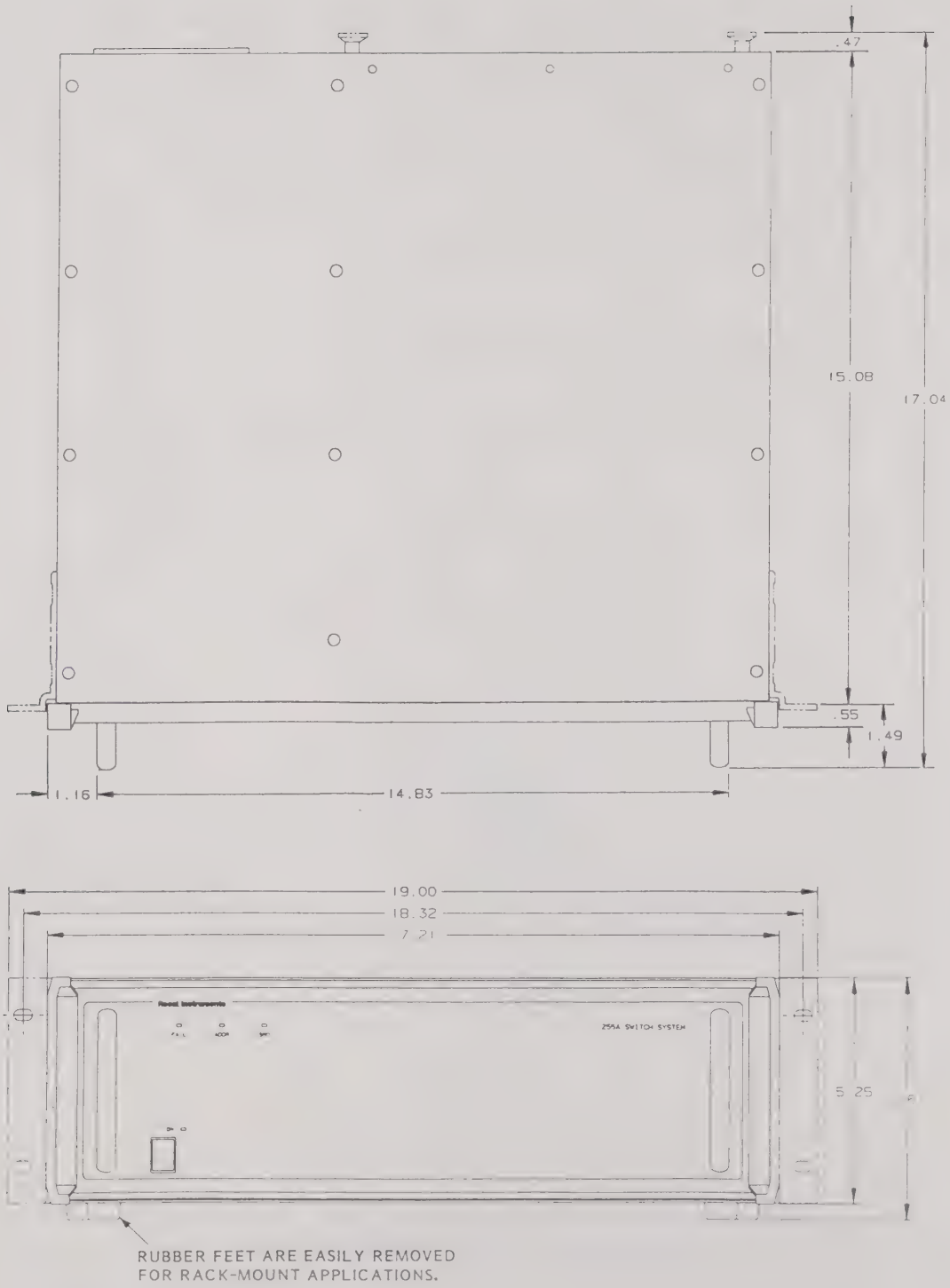

Figure 1-6 Dimensions

Installation and Setup

Main AC Power

The 1255A Switching System can be set by the user to operate from 90 to 132 VAC or from 180 to 264 VAC.

When the standard 1255A is shipped, it is configured for 120 VAC operation. If Option 71 (P/N 407609) is ordered, the 1255A is configured for 220 VAC operation. Should it be necessary to reconfigure the 1255A for another AC input voltage, refer to **Figure 2-1: Changing Fuse for Main AC Power**.

CAUTION

Make sure that the proper fuse is installed in the fuse holder before connecting the unit to a power source.

The 1255A is grounded in accordance with MIL-T-28800, protecting the user from possible injury due to shorted circuits.

CAUTION

Use only AC power outlets that have a protective ground. DO NOT USE 2-conductor extension cords or 3-prong to 2-prong adaptors that do not provide a protective ground connection.

A protective ground terminal, forming part of the rear-panel AC input socket, is provided. The 1255A is supplied with a detachable 3-conductor power cord. Only this cord should be used. Connection of the power cord to the power outlet must be made in accordance with the following standard color code:

CAUTION

Do not position the 1255A so that it is difficult to operate both the front panel Power Activation Switch, or rear panel S200 Main Power Switch. These switches function as disconnecting devices from the AC mains power.

CAUTION
If this equipment is used in a manner not specified in this manual the protection provided by the equipment may be impaired.

Function	Power Outlet Wire Color	
	American	European
Live	Black	Brown
Neutral	White	Blue
Ground (Earth)	Green	Green/Yellow

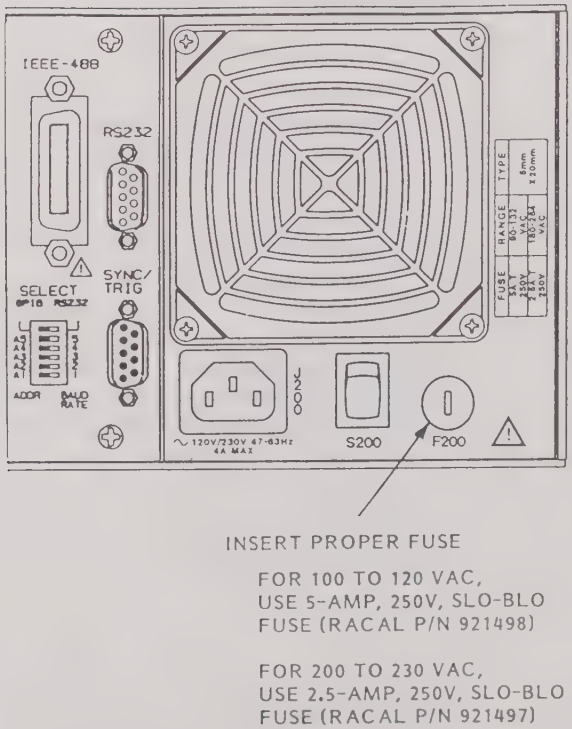

Figure 2-1 Changing Fuse for Main AC Power

Switch Module Configuration Switches

Each 1260-Series switch module has a DIP switch used for setting the module ID and address. Refer to **Figure 2-2: Setting Up Switch Modules**.

The module ID is a two-bit binary number that differentiates between modules of the same generic model number. For example, the 1260-30 Multiplexer is available in four configurations. Its two-bit module ID has four possible settings, one for each configuration:

- One 1 by 40 multiplexer Module ID = 00
- Two 1 by 20 multiplexers Module ID = 01
- Four 1 by 10 multiplexers Module ID = 10
- Eight 1 by 5 multiplexers Module ID = 11

This setting is made at the factory, and should be changed only if the module is later reconfigured. For specific module ID switch settings, refer to the appropriate section of **Appendix E: Modules**.

Each switch module in the 1255A chassis must have a unique four-bit binary card address, set by the DIP switch on the module (DIP switch segments 1 through 4). Refer to **Figure 2-2: Setting Up Switch Modules** for instructions on setting the address.

Figure 2-2 also indicates the positions of the Local Bus jumper switches, which are present only if the module is equipped with a 1260-Series Option-01 Smart Card. If the Option-01 Smart Card is present, it must be removed prior to installing the switch module into the 1255A chassis. Refer to **Appendix E: Modules** for instructions on installing and removing the Option-01 card.

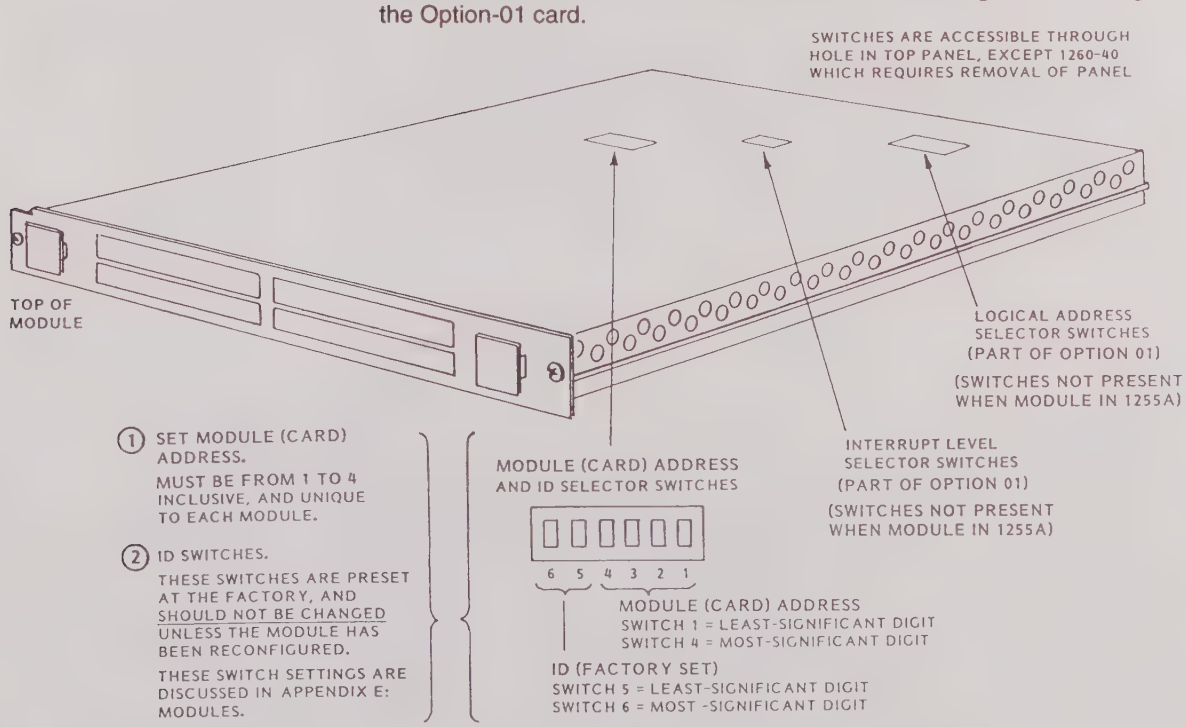

Figure 2-2 Setting Up the Switch Modules

Installing the Switch Modules

Figure 2-3: Inserting a Switch Module shows the proper way to install a 1260-Series module into the 1255A. The 1255A card guides are designed so that the module can be fully inserted only in the proper direction, with the "top" of the module front panel at your left as you insert the module.

When inserting the module, engage the ribs at both module edges with the 1255A card guides. Carefully slide the module into the chassis until it stops, then push it firmly to engage the rear connectors with the 1255A backplane. When the module is fully seated, its front panel will be flush with the rear edges of the 1255A chassis.

Carefully thread the retainer screws at each end of the module front panel into the 1255A chassis and tighten securely.

Connecting the GPIB Interface

You may connect your 1255A Switch System to the controller (host computer) through either the IEEE-STD-488 (GPIB) or RS-232 interface. If you intend to use the RS-232 interface, skip this topic and proceed to "Connecting the RS-232 Interface".

Basic GPIB Information

The GPIB standard permits up to 15 devices (including the controller) to interconnect and reside on a single bus. GPIB cables have identical "piggyback" connectors at each end, allowing several cables to be connected to a single source. System devices and instruments may be interconnected in almost any desired configuration. There must be a path from the controller to every device residing on the bus.

GPIB cables are available from Racal Instruments in three lengths:

- GPIB Cable, 1 meter (3.28 ft.) P/N 406845
- GPIB Cable, 2 meters (6.56 ft.) P/N 406844
- GPIB Cable, 4 meters (13.12 ft.) P/N 406846

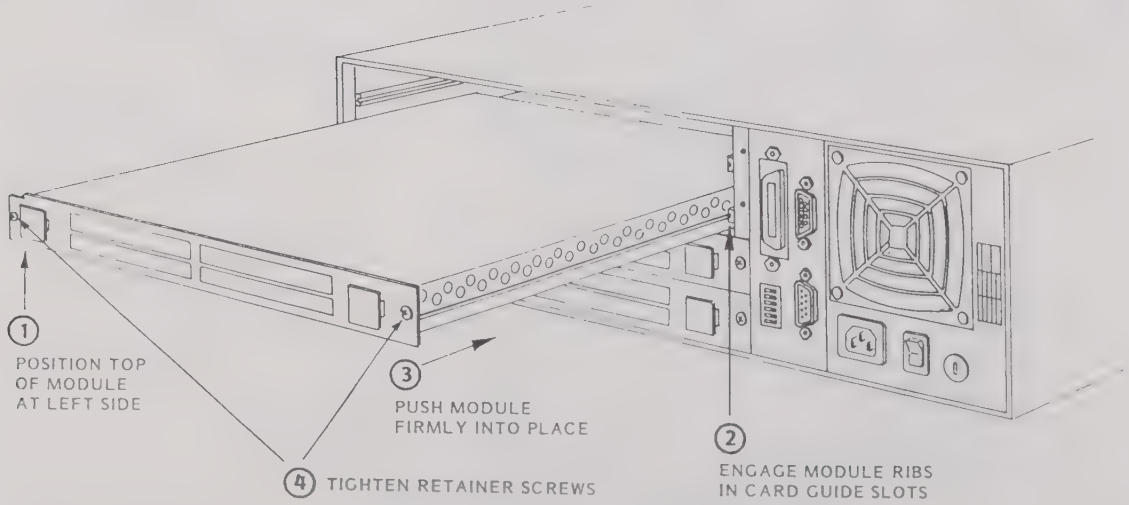

Figure 2-3 Inserting a Switch Module

GPIB Cabling Guidelines

When cabling a GPIB system, adhere to the following guidelines so that the signal lines are driven properly and the system performs correctly:

- Total cable length for the system must be no more than 20 meters (65.6 feet).
- Total cable length for the system must be no more than 2 meters (6.6 feet) times the total number of devices connected to the bus.
- Total number of devices (including controller) connected to the bus must not exceed 15.

Connecting GPIB Cables

Use a GPIB cable to connect the GPIB connector on the 1255A rear panel to the GPIB port of the host computer. Refer to **Figure 2-4: Using the GPIB Interface**.

CAUTION
Avoid stacking more than three cables on any single connector. If the stack is too large, the force may damage the connector mounting.

Tighten the locking screws finger-tight on each connector.

Setting the GPIB Address

The 1255A, as a GPIB bus member, must be assigned a unique address when operating in a GPIB system. The address for the 1255A is set by means of the DIP switch on the rear panel. Set the address to a number from 0 to 31. Also, set the GPIB/RS-232 segment of the DIP switch to the "GPIB" position. **Figure 2-4: Using the GPIB Interface** shows how to set the switch, and provides the pin-out data for the GPIB connector.

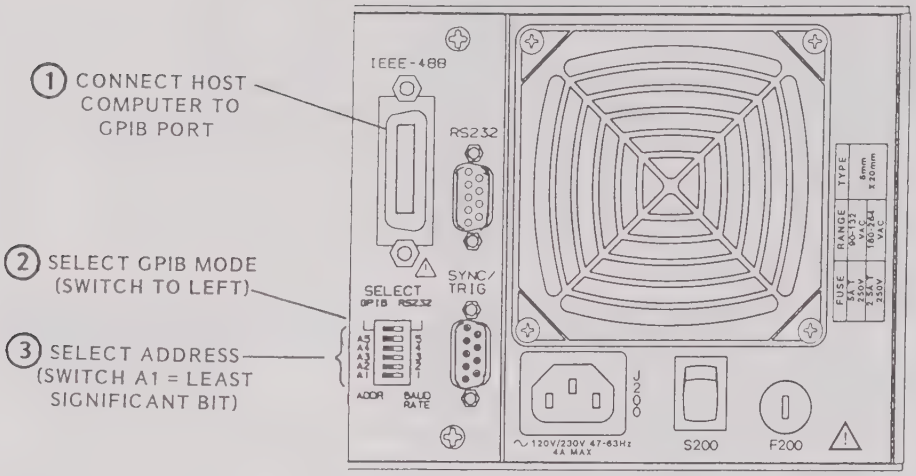

GPIB CONNECTOR PIN-OUT

PIN	NAME	DESCRIPTION
1	DIO-1	Data In/Out Bit 1 (LSB)
2	DIO-2	Data In/Out Bit 2
3	DIO-3	Data In/Out Bit 3
4	DIO-4	Data In/Out Bit 4
13	DIO-5	Data In/Out Bit 5
14	DIO-6	Data In/Out Bit 6
15	DIO-7	Data In/Out Bit 7
16	DIO-8	Data In/Out Bit 8 (MSB)
6	DAV	Data Valid
7	NRFD	Not Ready For Data
8	NDAC	Not Data Accepted
5	EOI	End Or Identify
9	IFC	Interface Clear
10	SRQ	Service Request
11	ATN	Attention
17	REN	Remote Enable
12	SHIELD	
18	GND (6)	
19	GND (7)	
20	GND (8)	
21	GND (9)	
22	GND (10)	
23	GND (11)	
24	GND (5 and 17)	

Figure 2-4 Using The GPIB Interface

Connecting the RS-232 Interface

If you will be communicating with the 1255A through the GPIB port, skip this topic.

The 1255A RS-232 port may be connected to a computer, data terminal, or modem.

Connecting To a Computer or Data Terminal

Use an RS-232 cable to connect the nine-pin female RS-232 connector on the rear panel to the RS-232 serial port on the host computer. Refer to **Figure 2-5: Using the RS-232 Interface**.

A shielded RS-232 cable is available from Racal Instruments:

- RS-232 cable, 10 ft. (3.05 meter) P/N 602248

This cable has a DB-09 connector at each end. The male connector connects to the 1255A and the female connector connects to the computer.

Connecting To a Modem

The RS-232 serial port of the 1255A was designed as "Data Communications Equipment" (DCE) to facilitate connection to a computer or data terminal ("Data Terminal Equipment", or DTE). A DCE-to-DTE connection such as this is made using a "straight-through" cable (i.e., connector pins 1, 2, 3, ... at one cable end connect to pins 1, 2, 3, ... , respectively, at the other end). However, if you wish to connect the 1255A to a modem instead of to a computer or data terminal, the connection will be DCE-to-DCE.

The DCE-to-DCE connection requires a special serial cable. The Received Data (RxD) and Transmitted Data (TxD) signals must be reversed at one connector, and the Clear-to-Send (CTS) and Request-to-Send (RTS) signals must also be reversed at one connector. This can be accomplished by constructing a special nine-pin serial cable with the signals wired as shown in **Figure 2-6: Using the 1255A with a Modem**. Note that the RS-232 connector at the 1255A is a 9-pin female D-Subminiature (DB-09) type.

Setting the RS-232 Mode

Refer to **Figure 2-5: Using the RS-232 Interface**. Select RS-232 Mode by setting the uppermost DIP switch segment (#1) to ON.

Setting the Flow Control Method

Flow control is a means by which the host computer (or other controller) may pace the flow of data coming from the 1255A so that the host computer has time to properly receive the data. It also allows the 1255A to pace commands coming from the host computer so that the 1255A has sufficient time to execute the commands as they arrive.

For most applications, software flow control is the simplest method. To select software flow control, set DIP switch segment #2 (second from top) to OFF (see **Figure 2-5: Using the RS-232 Interface**). Also set the host computer RS-232 flow control for "Software" or "XON/XOFF".

With software flow control, as implemented in the 1255A, an RS-232 device that is receiving data may send an XOFF character (ASCII 19_{10}) to the sending device, commanding the sending device to suspend data output. Later, when the receiving device is ready for more data, it may send an XON character (ASCII 17_{10}) to the sending device, indicating that data transmission may be resumed.

Another flow control method is hardware flow control, which may be selected by setting DIP switch segment #2 to ON. Also set the host computer RS-232 flow control for "Hardware flow control" or "RTS/CTS". Consult the manual for your terminal or terminal emulation software, or modem for instructions on how to set this parameter.

With hardware flow control, the 1255A normally holds the RS-232 Clear-To-Send (CTS) line in the TRUE state (-12 volts). When the 1255A is receiving data, and needs to have data transmission suspended, it takes the CTS line to the FALSE state (+12 volts). When it is ready for more data, it returns the CTS line to the TRUE state. The host computer (or other controller), on the other hand, uses the RS-232 Request-To-Send (RTS) line to pace data coming from the 1255A. The host computer normally holds the RTS line in the TRUE (-24 volts) state. To suspend data from the 1255A, it takes the RTS signal to the FALSE state (+24 volts).

If your controller does not support flow control, set the 1255A for software flow control by setting DIP switch segment #2 to OFF. Since a controller that does not support flow control will not send or respond to XON or XOFF characters, flow control will thus be non-existent. Note that operating without flow control may necessitate a slower baud rate in order to avoid data overrun problems.

If you are controlling the 1255A via modem, it is recommended that you use software flow control.

Setting the Echo-Back Option

If you are using a terminal or terminal emulation software, you may wish to have the 1255A echo back each character it receives from the terminal. When using this feature, the characters that you type will appear on the terminal screen only after they have been received by the 1255A. To use this feature, set DIP switch segment #3 to ON (see **Figure 2-5: Using the RS-232 Interface**), and turn off the "Local Echo" function of your terminal.

If you are controlling the 1255A through automated means, such as a computer program, it is usually best not to have the 1255A echo the characters back. In this case, set DIP switch segment #3 to OFF.

Note that if echo-back is enabled and the terminal sends characters to the 1255A extremely quickly, some characters may not be echoed back to the terminal, although all are properly processed by the 1255A. This can happen if you "paste" commands from a large text buffer or if you generate and send commands from within a computer program. This is one reason to disable echo-back when controlling the 1255A through automated means.

Setting the Baud Rate

Set the baud rate using DIP switch segments 4 through 6 (see **Figure 2-5: Using the RS-232 Interface**). Set the RS-232 port of your controller to the same baud rate as the 1255A.

Setting Other Parameters

Configure the RS-232 port of the controller (host computer, terminal, or modem) as follows:

- Data bits: 8
- Parity: None
- Stop bits: 1

Refer to the user's manual for your equipment for instructions on making these settings. If you are using a computer with terminal emulation, refer to the user's manual for the terminal emulation software.

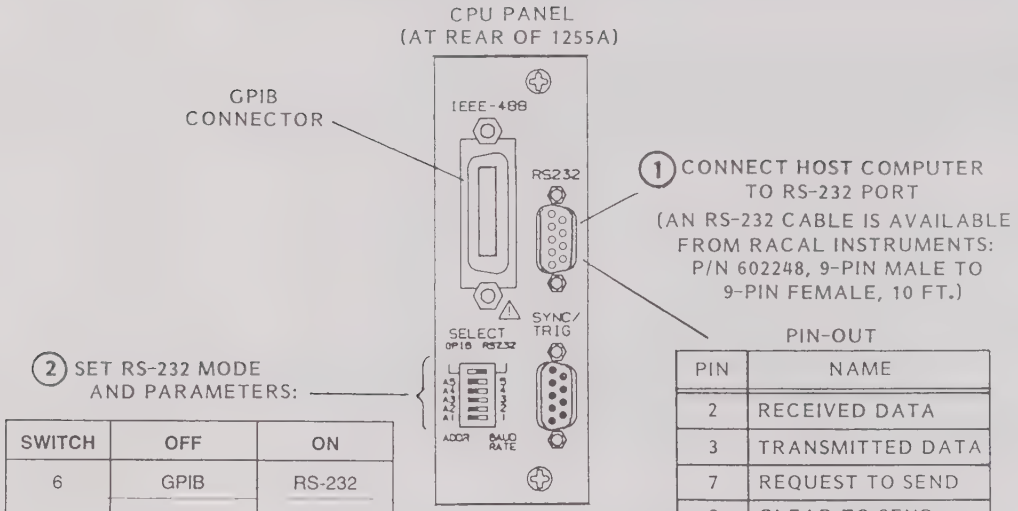

PIN	NAME
2	RECEIVED DATA
3	TRANSMITTED DATA
7	REQUEST TO SEND
8	CLEAR TO SEND
5	SIGNAL GROUND

NOTE:
RS-232 CONNECTOR
ON 1255A IS A FEMALE
DB-09.

SWITCH	OFF	ON
6	GPIB	RS-232
5	Software flow control (XONN/XOFF)	Hardware flow control (RTS/CTS)
4	No echo-back	Echo back all characters
3	Baud rate (see table below)	
2		
1		

BAUD RATE	SW3	SW2	SW1
300	OFF	OFF	OFF
1200	OFF	OFF	ON
2400	OFF	ON	OFF
4800	OFF	ON	ON
9600	ON	OFF	OFF
19200	ON	OFF	ON
9600	ON	ON	OFF
9600	ON	ON	ON

NOTE: SWITCHES 4 AND 5 NOT USED IN RS-232 MODE.

Figure 2-5 Using The RS-232 Interface

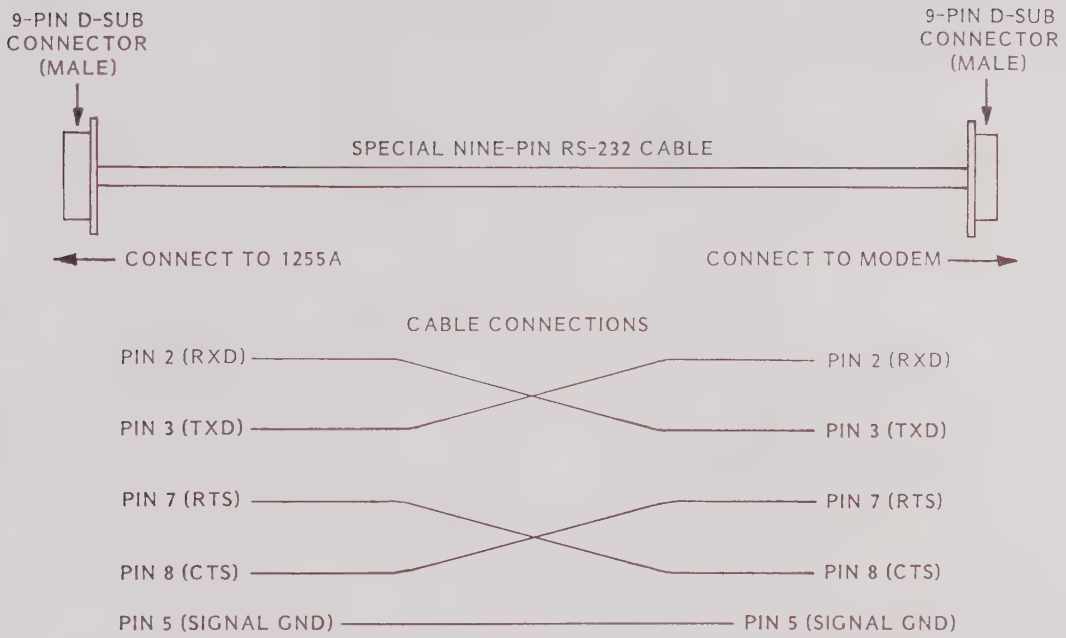

NOTE: THIS FIGURE APPLIES ONLY WHEN CONNECTING 1255A TO DATA COMMUNICATIONS EQUIPMENT, SUCH AS A MODEM.

Figure 2-6 Using The 1255A With a Modem

Connecting The External Trigger and Sync Output

You may use an external device to trigger the 1255A to close or open relays. Also, the 1255A can send a SYNC signal to an external piece of equipment. The external trigger and sync output signals are connected at the 1255A via the TRIG IN/SYNC OUT connector on the rear panel. Refer to **Figure 2-7: Using SYNC OUT and TRIGGER IN** for the connector location, pin-out, and signal information.

To connect to TRIG IN/SYNC OUT, use a 9-pin female D-Subminiature (DB-09) type connector, such as Racal Instruments P/N 601727.

Switch Module Connections

Refer to **Appendix E: Modules** for information about connecting the switch modules to the unit under test.

You are now ready to apply power to your 1255A Enhanced Switch System.

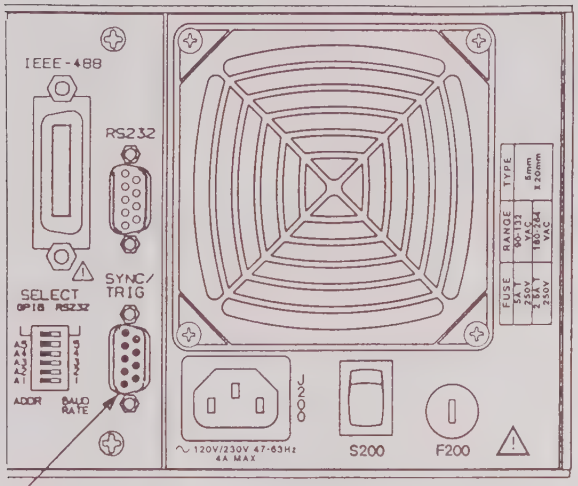

CONNECT EXTERNAL INSTRUMENTATION TO SYNC OUT/TRIGGER IN CONNECTOR

PIN	FUNCTION
1	GND
2	SYNC OUT
3	TRIGGER
4 THRU 9	NOT CONNECTED

NOTE:
USE A 9-PIN FEMALE D-SUBMINIATURE (DB-09) TYPE CONNECTOR (SUCH AS RACAL INSTRUMENTS P/N 601727) TO MATE WITH SYNC OUT/TRIGGER IN CONNECTOR.

SIGNAL CHARACTERISTICS:

SYNC OUT:

SIGNAL LEVEL:	TTL
SIGNAL CHARACTERISTICS:	LOW (TTL 0) WHILE COMMAND STRING IS BEING PROCESSED POSITIVE-GOING PULSE IS GENERATED AT THE COMPLETION OF EACH RELAY COMMAND.
PULSE WIDTH:	2µS

TRIGGER IN:

SIGNAL LEVEL:	TTL
SIGNAL CHARACTERISTICS:	NEGATIVE-GOING EDGE TRIGGERS THE 1255A
PULSE WIDTH:	LOGIC "1" OR "0": 30nS MIN.

Figure 2-7 Using Sync Out and Trigger In

Communicating With The Enhanced Switch System

Activating Main AC Power

The 1255A provides two power switches, one on the front panel and one on the rear panel (see **Figure 2-8: Activating Main AC Power**). Both switches must be ON to operate the 1255A. You may use either switch to shut down the 1255A when it is not in use. For example, if the 1255A is rack mounted in the forward position (front panel at front of rack), you may use the front panel switch to turn the unit on and off (leave the rear switch in the ON position). On the other hand, if the 1255A is reverse mounted (rear panel at front of rack), you may use the power switch on the rear panel to turn the unit on and off (leave the front panel switch in the ON position).

The rear switch is the main power switch. When this switch is in the OFF position, the power supply draws no current. When this switch is ON, a small amount of power is drawn by the standby circuit, which monitors the front panel switch.

When the main power switch is ON, the front panel switch controls whether the 1255A is in Standby mode (switch down) or Power On mode (switch up). In Standby mode, the 1255A draws very little power, since no power is provided to the CPU Module, the switching modules, or the cooling fan. In Power On mode, the 1255A is fully operational.

Switch System Self-Test

Activate the main AC power by setting both the front panel and rear panel power switches to the ON position. The front panel ON indicator will illuminate immediately, showing that the CPU is functioning. The FAIL and ADDR indicators will also illuminate briefly while the CPU executes the self test. Within two seconds after power turn-on, both the FAIL and ADDR indicators will extinguish, indicating that the 1255A has passed its self-test. If the ON indicator does not come on, or if the FAIL indicator stays on after two seconds, refer to **Appendix D: Troubleshooting** to solve the problem.

Sending Commands To The Switch System

Now that you have applied power to the 1255A and run its self test, you are ready to send commands to check the status of the switching modules and to control their relays.

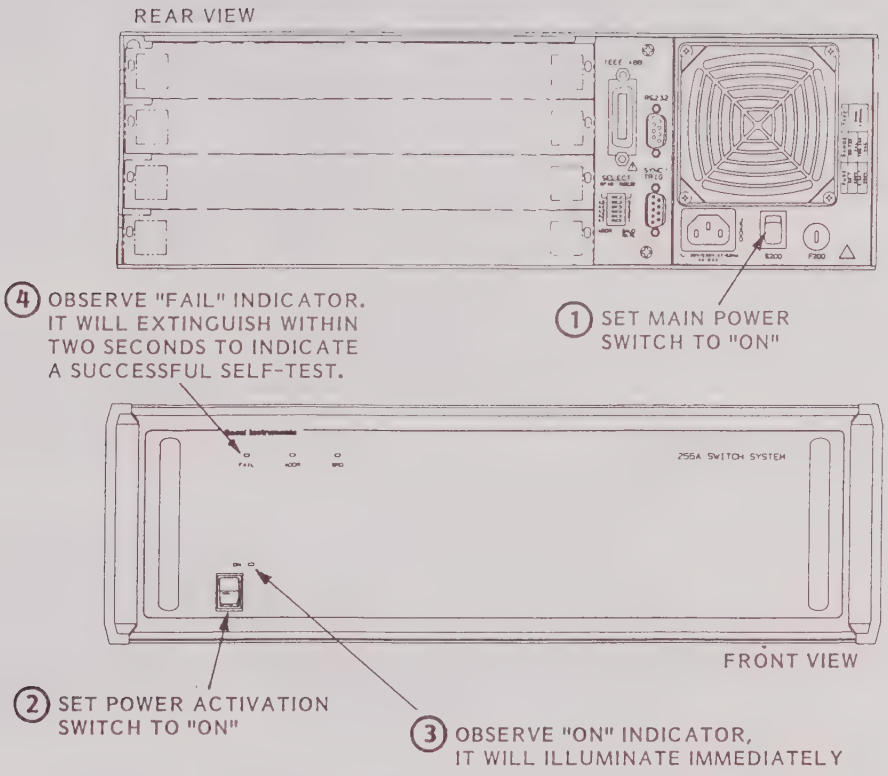

Figure 2-8 Activating Main AC Power

Resetting The Switch Modules

When setting up the 1255A, it is good practice to start by resetting it. This puts it into a known state. You may reset the 1255A by sending a *RESET* command. If you are using the GPIB interface, you may also reset the 1255A by executing a *DEVICE CLEAR* command from your GPIB controller. Consult your GPIB controller user's manual for instructions on how to do this. If you are using the RS-232 interface, you may also reset the 1255A by simply pressing the ESCape key on your controller.

When the 1255A is reset, it puts all relays on the switch modules into their default conditions. Normally-open relays are opened, and normally-closed relays are closed. For default conditions of latching relays and tree switches, refer to the appropriate section of **Appendix E: Modules**.

Commands To Verify Presence of Switch Modules

After configuring the 1255A Switch System, use the *PDATAOUT* command to ensure the 1255A recognizes and communicates with all of the switch modules that you installed. Send the following command to the 1255A:

```
PD 0-4
```

(Note that the letters `PD` are an abbreviation for `PDATAOUT`). This command tells the 1255A to respond with a list of all devices that have an address in the range from 0 through 4, and to show the present state of each relay on those that are switch modules. The controller built into the 1255A has address 0, and all switch modules must have addresses in the range from 1 to 4. Therefore, the 1255A will always respond to the `PD 0-4` command by giving the status of the built-in controller and all of the installed switch modules.

For example, if four 1260-40A modules are installed, and the addresses are set from 1 through 4, the 1255A will respond with:

```
000. MODEL 1255A UNIVERSAL SWITCH CONTROLLER
000. OS REV 26.1 1255A
001. 1260-40A 4X24 SIGNAL MATRIX MODULE
001.
002. 1260-40A 4X24 SIGNAL MATRIX MODULE
002.
003. 1260-40A 4X24 SIGNAL MATRIX MODULE
003.
004. 1260-40A 4X24 SIGNAL MATRIX MODULE
004.
004.END
```

In the above example, the second line provides the firmware revision number, which is 26.1 in this case.

If any of the switch modules that you installed do not appear in the list, refer to **Appendix D: Troubleshooting** to correct the problem.

Closing a Relay

Now that you have verified that the 1255A is properly communicating with the switch modules, try using the *CLOSE* command to close a relay. This command consists of the word `CLOSE` followed by the address of the switch module containing the desired relay, followed by the number of the relay. For example, suppose you have installed a 1260-13 Signal Switching/Relay Module, have set the module address DIP switch to 2, and wish to close the relay for channel 5. You would send the following command:

```
CLOSE 2.5
```

The exact syntax is unique to each type of switch module. For the syntax used for other modules, refer to the appropriate section of **Appendix E: Modules**, under the heading "Module-Specific Syntax".

Opening a Relay

To open a relay, use the *OPEN* command, which has the same syntax as the *CLOSE* command. To open the relay that was closed in the previous example, you would send the following command:

```
OPEN 2.5
```

Installing The Optional Slide Mount Kit

If you are installing the 1255A Switch System in a rack, and wish to mount it on slides for easier access, refer to **Appendix C: Installing the Optional Slide Mount Kit**.

Using The Enhanced Switch System

Communication Guidelines

Input Format

You may abbreviate a command by including only the first few characters. For example, the 1255A recognizes the *CLOSE* command from the abbreviations `CL`, `CLO`, or `CLOS`. Similarly, `OP` and `OPE` are valid abbreviations for the *OPEN* command.

An abbreviation must obey two rules:

- The command must be spelled correctly. For example, the 1255A will not recognize `OPN` or `OPR` as abbreviations for `OPEN`.
- All commands may be abbreviated to the first two letters except the *RESET*, *READ*, and *RECALL* commands. These commands require at least the first three characters.

The general syntax for all 1255A command lines is:

<command> [arg 1] [arg 2] ... [arg n] <terminator>

where:

<command> =	the command keyword or its abbreviation
[arg 1] =	the first argument of the command (as applicable)
[arg n] =	the *n*th argument (as applicable)
<terminator> =	carriage-return (ASCII 13_{10}), line-feed (ASCII 10_{10}), or carriage-return/line-feed pair (ASCII 13_{10} followed by ASCII 10_{10})

Commands are limited to 254 characters in length, including *<terminator>*.

Output Format

The 1255A will output character strings in response to the *PDATAOUT*, *PSETUP*, and *YERR* commands. A character string consists of one or more lines of information, each terminated by a carriage return and a line feed. Each character string begins with a "space" character (ASCII $20). All characters in the string are upper-case. If the GPIB interface is used,

EOI is asserted either at the end of each line or at the end of each message, depending on which mode has been set using the *EOI* command (see *EOI* command in **Section 4: Command Reference**).

If the GPIB interface is used, the controller must repeatedly read character strings from the *PDATAOUT* and *PSETUP* commands until the last line of output is read. The final line of output is `<module address>.END`, where `<module address>` is the address of the last module described in the output.

The *YERR* command always results in the output of a single-line string.

Character string lines that are output in response to the *PDATAOUT* and *PSETUP* commands have the form:

<module address>.<header>

followed by:

<module address>.<module-specific syntax>

or:

<module address>.<module-specific setup info>

followed by:

<last module address>.END

where:

<module address> = the address set on switch S1 on the switching module (see **Figure 2.2: Setting Up the Switch Modules**). The address must be a number from 1 through 4 inclusive. No two switching modules in a 1255A may have the same address.

<header> = the switching module type. Example: `1260-40A 4x24 SIGNAL MATRIX MODULE`

<module-specific> = the switch module relay paths that are currently closed, or synchronous port data on the 1260-14 Digital I/O Module.

<module-specific setup info> = configuration of a digital module.

GPIB Serial Poll Status Byte

The status byte carries the following information:

Bit Number	Bit Value	Description
1 (LSB)	1	Unused
2	2	Unused
3	4	Unused
4	8	Scan List at Break Point
5	16	Ready
6	32	Programming Error
7	64	Service Requested
8 (MSB)	128	Unused

This byte is returned to the controller in response to a Serial Poll Enable (SPE) message.

NOTE

When bit 7 of the status byte (Service Requested) is set to show that SRQ is asserted, the 1255A will not respond to any GPIB commands until the interrupt has been serviced. This may be done with a serial poll. After the interrupt has been serviced, the error code generated must be obtained over the GPIB in response to the *YERR* command.

Bits 6 and 7 are cleared after each Serial Poll Enable (SPE) command. Bit 5 is cleared by sending instructions to the 1255A, and is set when the 1250 finishes executing a command. These transitions coincide with the rising and falling edges of the SYNC OUT output, respectively. All status bits are active-high.

Reading Error Messages

If the self test fails or if you send an invalid command, an error condition occurs. To identify an error, send the command `YERR`. The 1255A will respond with a string in the following format:

<module address>.<error number>

where:

<module address>= the address of the module where the error occurred. Address 00 is used if the error occurred

in the 1255A controller. Address xxx is used if no specific module is associated with the error.

<error number>= a 2-digit code indicating the type of error that occurred. For a list of error codes and their descriptions, refer to **Appendix B: Error Messages**.

The *YERR* command is not required in order to clear an error condition. The *YERR* command is used only to detect and identify an error condition.

After turning on the 1255A, it is good practice to examine the GPIB status byte to verify that no errors occurred during the self test. If you are using an RS-232 interface instead of GPIB, you may send the *YERR* command to determine whether an error occurred. An error code of 0 will be returned if the self test passed.

Basic Operations and Commands

Introduction

The following topics will familiarize you with the basic operations of the 1255A Switch System and its command set. For a detailed description of each command, refer to **Section 4: Command Reference**.

Checking For Installed Modules

To verify which switch modules have been installed, use the *PDATAOUT* command. Send the following command to the 1255A (note PDATAOUT is abbreviated as PD):

```
PD 0-4
```

This commands the 1255A to list all installed modules that have an address in the range from 0 through 4. (address 0 applies to the 1255A Enhanced Switch System, and 1 through 4 are the valid addresses for the switch modules). It will also show the present state of each relay. For example, if four 1260-40A modules are installed, and the installed modules have their addresses set from 1 through 4, the 1255A will respond with:

```
000. MODEL 1255A UNIVERSAL SWITCH CONTROLLER
000. OS REV 26.1 1255A
001. 1260-40A 4X24 SIGNAL MATRIX MODULE
001.
002. 1260-40A 4X24 SIGNAL MATRIX MODULE
002.
003. 1260-40A 4X24 SIGNAL MATRIX MODULE
003.
004. 1260-40A 4X24 SIGNAL MATRIX MODULE
004.
004.END
```

Let us examine this response line by line.

The first line is "`000. MODEL 1255A UNIVERSAL SWITCH CONTROLLER`". The first three characters of each line specify the Local Bus address of the module described by that line. In the above example, the address given is 000, indicating that this line refers to the 1255A Switch Controller itself. The remainder of the line describes the 1255A by model number and name.

The second line, "`000. OS REV 26.1 1255A`", also specifies a Local Bus address of 000. The remainder of this line specifies the revision level of the 1255A operating system firmware.

The third line, "`001. 1260-40A 4X24 SIGNAL MATRIX MODULE`", specifies address 001. Since this is a non-zero address, this line refers

to a switch module. The remainder of the line shows the model number (1260-40A) and description of the switch module.

The fourth line, "`001.`", also refers to the switch module having address 001. This line would normally show which relays were closed on this module. Since you have not yet closed any relays since applying power to the 1255A, the rest of this line is blank.

The lines that follow describe the other switch modules that are installed, and provide the status of their relays.

The last line, "`004.END`", indicates the end of the module listing. The first three characters of this line always match the address of the last switch module listed.

Note that on all lines except the `END` line, there is a space between the period (.) and the next character. Thus, the last line of a multiple-line output can be detected programmatically by searching for the letter "E" in the fourth character position.

Resetting The Switch Modules

To reset the switch modules to their default conditions, send the command `RESET`. This will open all normally-open relays, close all normally-closed relays, and put the tree switch and latching relays in their default states. See the appropriate section of **Appendix E: Modules** for the default conditions of tree switches and latching switches.

The *RESET* command also restarts the 1255A Enhanced Switch System firmware as though power had been cycled.

More About Closing Relays

You may close more than one relay with a single command, even if the relays reside on different switch modules. Use the command form:

CL[OSE] <relay designator>[;<relay designator>...]

where:

<relay designator> = *<module address>.<relay range>[,<relay range>...]*

<relay range> = *<module specific syntax>[-<module specific syntax>]*

<module address>= A number specifying the address of the switch module containing the switch to be opened. Valid addresses range from 1 through 4, inclusive.

<module-specific>= A number specifying which switch on the switch module is to be opened. See the appropriate section of **Appendix E: Modules** for the syntax of a specific module.

Refer to the appropriate section of **Appendix E: Modules** for the module-specific syntax to be used with each switching module.

Example:

```
CLOSE 1.3,4;3.5
```

This command closes relay channels 3 and 4 on module 1 (the module whose address is 1). It also closes relay channel 5 on module 3.

More About Opening Relays

You may open more than one relay with a single command, even if the relays are on different switch modules. Use the command form:

OP[EN] <relay designator>[;<relay designator>...]

where:

<relay designator>= <module address>.<relay range>[,<relay range>...]

<relay range>= <module specific syntax>[-<module specific syntax>]

Refer to the appropriate section of **Appendix E: Modules** for the module-specific syntax to be used with each switching module.

Example:

```
OPEN 1.3,4;3.5
```

This command opens relay channels 3 and 4 on module 1. It also opens relay channel 5 on module 3.

Using SETUP To Control Switching Sequence

The *SETUP* command controls the sequence in which relays are opened and closed when more than one relay has been commanded to change. The *SETUP* command has the form:

SETUP <module address>.<seqmode>

The *<seqmode>* parameter may be one of three modes:

- *IMM* (Immediate). Causes channels (relays) to be opened and closed as quickly as possible. The sequence of opening and closing is indeterminate. In this mode, care must be taken to avoid damaging equipment while the relays are in transition, i.e. by short circuiting power supplies, connecting high-power outputs together, or applying excessive power to low-impedance inputs.

- *BBM* (Break Before Make). Causes existing channel closures to be opened before new channel closures are made. BBM is the default mode on power-up, or after the 1255A has been reset.

- *MBB* (Make Before Break). Causes new channel closures to be made before existing channel closures are opened.

Example:

```
SETUP 4.MBB
```

This command causes switch module 4 (the switch module whose address is 4) to operate in Make-Before-Break mode.

Using EQUATE To Group Switches

The *EQUATE* command provides a shortcut when identical switching commands would be sent to multiple switch modules. For example, suppose that the following commands are sent:

```
CLOSE 2.23;2.25
CLOSE 4.23;4.25
OPEN 2.1;2,3
OPEN 4.1;4.3
```

The same commands are being sent to modules 2 and 4 (relays 23 and 25 are closed by the first two commands, and relays 1 and 3 are opened by the last two commands). The same result can be achieved by the following sequence of commands:

```
EQU 2,4
CLOSE 2.23;2.25
OPEN 2.1;2,3
```

The first command equates modules 2 and 4 so that any command sent to module 2 will also apply to module 4. The second command closes relays 23 and 25 on module 2 and closes relays 23 and 25 on module 4. The third command opens relays 1 and 3 on module 2 and on module 4.

Note that two modules can be equated only if they are identical, i.e. they have the same model number and same module ID setting. For example, a 1260-30A (module ID = 0) cannot be equated to a 1260-30B (module ID = 2), since they do not have the same module ID.

Any number of modules may be equated. The general form is:

EQU <equate list>

Where *<equate list>* specifies which modules are being equated. The equate list is made up of the addresses of the modules to be equated, separated by semicolons (;). Continuous groups of modules may be entered into the equate list by entering the first and last modules, joined by a hyphen (-). More than one equate group may be set up in single *EQU* command by separating the equate groups with a comma (,).

Example 1:

```
EQU 1;2,3;4
CLOSE 1.4
CLOSE 4.3
```

The first command equates modules 1 and 2 into a group, and separately equates modules 3 and 4 into another group. The second command closes relay 4 on module 1, and relay 4 on module 2. The third command closes relay 3 on module 4, and relay 3 on module 3.

Example 2:

```
EQU 1-3
```

This command equates modules 1, 2, and 3 into one group.

The following rules apply to equate lists:

- All switching modules must be of the same model number in order to be accepted in the same equate group. Otherwise, the 1255A will generate an error condition.
- To cancel all equate groups, send `EQU 0`.
- When an equate list is entered, all switch modules on the list adopt the state of the first module that appears in the list.

Exclude lists are convenient when using relays to select one signal or power path from among several. They can also help prevent inadvertent short circuits in the event of a software error.

Using Exclude Lists

An exclude list is a list of relays that the 1255A regards as a mutually exclusive group. Only one relay that is a member of an exclude list may be closed at a time. If a relay in the group is already closed, and you send a command to close a second relay in the group, the first relay will open and the second relay will then close.

The general form for the *EXCLUDE* command is:

EXCL <exclude list>

Where:

<exclude list>= a list of relays that will be members of the exclude list. The relay numbers are separated by semicolons (;). Continuous groups of relays may be entered into the exclude list by entering the first and last relays, joined by a hyphen (-). More than one exclude group may be defined in a single exclude list command by separating the exclude groups with a comma (,).

Example 1:

Consider the following sequence of commands for a 1260-13 switch module:

```
EXCL 1.5,1.6
CLOSE 1.5
CLOSE 1.6
```

The first command establishes relays 5 and 6 on module 1 as a mutually exclusive group. The next command causes relay 5 on module 1 to close. The last command will cause relay 5 to open and relay 6 to close.

For the module-specific syntax of other switching modules, refer to the appropriate section of **Appendix E: Modules**.

Example 2:

Consider the following command sequence:

```
EXCL 3.5;4.2,3.8;4.5
CLOSE 3.5
CLOSE 4.2
CLOSE 3.8
```

The first command establishes two exclude groups. The first group consists of relay 3.5 (relay 5 on module 3) and relay 4.2. The second exclude group consists of relays 3.8 and 4.5.

The second command closes relay 3.5.

The third command opens relay 3.5 and then closes relay 4.2 (these relays are in the same exclude group).

The last command closes relay 3.8. Note that relay 4.2 remains closed, because it is not in the same exclude group as relay 3.8.

The formatting rules for an exclude list are:

- To specify a range of relay numbers in an exclude list, use a hyphen between the lowest and highest relay number. For example:

  ```
  EXCL 1.5-8
  ```

  This command would create an exclude group consisting of relays 1.5, 1.6, 1.7, and 1.8.

- To include more than one exclude list in the *EXCLUDE* command, separate the exclude groups with the letter E and a semi-colon (;). For example:

  ```
  EXCL 2.1-10E;3.4-8
  ```

The above command would create two exclude groups. The first would be comprised of relays 1 through 10 on module 2. The second group would consist of relays 4 through 8 on module 3.

Using SYNC With External Instruments

The 1255A provides a synchronization signal that you may use to trigger external instruments, such as digital multimeters (DMMs). This signal, a TTL-compatible logic pulse, is available from the SYNC/TRIG connector on the rear panel of the 1255A (see **Figure 2-7: Using SYNC OUT and TRIGGER IN**). When the sync function is enabled, the 1255A generates the sync pulse at the end of each relay operation. You may use this pulse to trigger a measurement on an external instrument.

To enable the sync function, send the following command:

```
SYNC ON
```

To disable the sync function, send:

```
SYNC OFF
```

The 1255A can insert a programmable delay from the time it operates the relays until it generates the sync pulse. This delay is useful for allowing the relays to settle before the sync pulse triggers an external measurement instrument. Use the *DLY* command to specify the amount of delay in milliseconds. For example, consider the following command sequence:

```
SYNC ON
DLY 10
CL 1.2
```

The first command enables the sync pulse function. The second command sets the delay time to 10 milliseconds. The third command closes relay 1.2, delays 10 milliseconds, and then generates a sync pulse.

For most switch modules, a delay time of 5 milliseconds is adequate to ensure that the relays are fully settled before the sync pulse is given. For the relay settling times of specific modules, refer to the specifications provided in **Appendix E: Modules**.

Using Scan Lists and The External Trigger

A scan list allows you to specify a list of switching commands to be performed. Once you have defined this list, the 1255A will automatically sequence through the scan list, executing one command each time it detects a trigger pulse at the external trigger input of the SYNC/TRIG connector.

Three types of commands may be entered into a scan list:

- Close a specific relay
- Recall a configuration from a non-volatile memory location

- Break (stop scan list processing)

Example:

Suppose the following two commands were sent:

```
SLIST 1.1, 4, 5
SCAN ON
```

The first command defines the scan list, consisting of relays 1.1, 1.4, and 1.5.

The second command enables the scan function.

The first external trigger pulse that is received (at the SYNC/TRIG connector) will cause relay 1.1 to be closed. The second trigger pulse will cause relay 1.1 to open and relay 1.4 to close. The third trigger pulse will cause relay 1.4 to be opened and relay 1.5 to be closed.

Upon receiving the fourth trigger pulse, relay 1.5 will be opened and relay 1.1 will be closed. Note that when all commands in the scan list have been executed, the sequence loops back to the top of the list.

Asserting SRQ

The GPIB can set the SRQ bit in the GPIB status word in response to various conditions. When the 1255A asserts the SRQ bit, it also illuminates the SRQ indicator on the 1255A front panel. The conditions that can cause assertion of the SRQ bit are:

- Scan List at Breakpoint: Scan list execution has reached a breakpoint command.
- Ready: The 1255A is idle, and waiting for the next command.
- Programming Error: The 1255A has received a command that cannot be executed.

Each of these conditions, plus the status of the SRQ bit itself, are reported in the GPIB status word. The bit assignments for the GPIB status word are as follows:

Bit Number	Bit Value	Description
1 (LSB)	1	Unused
2	2	Unused
3	4	Unused
4	8	Scan List at Break Point
5	16	Ready
6	32	Programming Error
7	64	Service Requested (SRQ)
8 (MSB)	128	Unused

Bits 4, 5, and 6 represent the conditions that can result in a service request, by which bit 7 (SRQ) would be set. The SRQ mask is an eight-bit binary number that is used to control which of the above conditions will result in the assertion of the SRQ bit. To control which conditions can cause SRQ assertion, send the command `SRQMASK`, followed by the mask value.

Example:

Suppose you wish to have SRQ asserted when the 1255A is ready for the next command or a programming error has occurred. From the above table, the corresponding GPIB status word bits are 5 and 6. These are the bits that must be set in the SRQ mask to enable these conditions to cause a service request. From the above table, the corresponding bit values are 16 and 32, respectively. The desired SRQ mask value is therefore 16 + 32 = 48. To set this mask value, enter the command:

```
SRQMASK 48
```

At power up, or when a *RESET* command is executed, the default SRQ mask value is set to 40, which means that either a "Programming Error" or "Scanlist at Breakpoint" event will cause SRQ assertion. To determine the current state of the SRQ mask, use the command `PSETUP 0`.

Note that a Programming Error (bit 6) cannot be disabled. Therefore, bit 6 of the SRQ mask must always be 1.

Using Confidence Mode

When Confidence Mode is enabled, the 1255A checks the status of all switches after it closes or opens any of them. If any relay is not in the correct state, the 1255A asserts the GPIB Service Request (SRQ) bit in the GPIB status register, provided that the SRQ mask has enabled a Confidence Mode error to set the SRQ bit. Confidence Mode is enabled and disabled by means of the *CNF* command.

Example:

```
SRQMASK 32
CNF ON
CL 1.3
CNF OFF
```

The first command sets the SRQ mask to recognize programming errors. Thus, detection of a Confidence Mode error (classified as a programming error) will set the SRQ bit in the GPIB status register.

The second command enables Confidence Mode.

The third command closes relay 1.3 (relay 3 on the switch module having an address of 1). After closing relay 1.3, the 1255A will check the status of all relays in all switch modules. If any relay is not in the correct state, the 1255A will assert the SRQ bit, and will illuminate the SRQ indicator on the front panel.

The fourth command disables Confidence Mode.

When Confidence Mode is enabled, commands are executed more slowly because of the time consumed in reading the status of all relays. The amount of slowdown depends on the quantity and types of switch modules that are installed.

Controlling The GPIB EOI Line

The GPIB End or Identify (EOI) line is used for signaling the end of output data from the 1255A. The EOI line may be programmed to behave in two different ways:

1. Mode 0: EOI line asserted after each line of output from the 1255A. This is the power-up default mode.

2. Mode 1: EOI line asserted at the end of the entire message from the 1255A.

To determine which mode is currently in effect, use the *PSETUP* command.

Once the EOI line has been asserted, it remains asserted until the controller reads the data from the 1255A.

Example 1:

Sending the commands:

```
EOI 0
PDATAOUT 0
```

will cause the 1255A to respond with the following character strings, each terminated with a carriage return and line feed. The EOI signal will be asserted when the line-feed character of each line is sent.

```
000. MODEL 1255A UNIVERSAL SWITCH CONTROLLER
000. OS REV 26.1 1255A
000.END
```

Example 2:

Sending the commands:

```
EOI 1
PDATAOUT 0
```

will cause the 1255A to respond with the following character strings, each terminated with a carriage return and line feed (EOI will be asserted only at the end of the last line of text):

```
000. MODEL 1255A UNIVERSAL SWITCH CONTROLLER
000. OS REV 26.1 1255A
000.END
```

Saving Configurations in Non-Volatile Storage

The 1255A provides non-volatile memory for storing the states of all relays. The non-volatile memory has 50 storage locations, numbered from 1 to 50. Each location can be used to store the status (open or closed) of all relays on all installed switch modules.

To use non-volatile storage, set the relays in the desired states, then send the *STORE* command, specifying which memory storage location (1 to 50) to use. To recall a relay configuration from non-volatile memory, use the *RECALL* command with the number of the memory location to recall.

Example:

Consider the following sequence of commands:

```
RESET
CL 1.2,5,2.3,8
STORE 3
RESET
RECALL 3
```

The first command resets all relays to their default states (see the appropriate section of **Appendix E: Modules** for the default relay states for specific switch modules).

The second command closes relays 1.2, 1.5, 2.3, and 2.8.

The third command stores the states of all relays in location 3 in the non-volatile memory.

The fourth command resets all relays back to their default states.

The last command recalls the states of the relays from storage location 3, causing relays 1.2, 1.5, 2.3, and 2.8 to be closed.

Relay configurations can also be recalled by scan lists.

Example:

Suppose the following sequence of commands were sent to the 1255A:

```
RESET
CL 1.5,6
STORE 2
RESET
SLIST 1.2,3;2
```

The first command would reset all relays to their default states.

The second command would close relays 1.5 and 1.6.

The third command would store the relay configuration in non-volatile memory location #2.

The fourth command would reset all relays back to their default states.

The fifth command would define a scan list, consisting of relay 1.2, relay 1.3, and non-volatile memory location 2.

If an external trigger pulse were then asserted at the SYNC/TRIG connector, then the first item on the scan list, the closure of relay 1.2, would be executed. The next external trigger pulse would cause relay 1.2 to open and relay 1.3 to close.

The next external trigger pulse would result in the recall of the configuration of non-volatile memory location #2. This would cause relays 1.2 and 1.3 to open (they were open when the configuration was stored in location #2), and relays 1.5 and 1.6 to close.

In Case of Trouble

If you have any problems using the 1255A Enhanced Switch System, refer to **Appendix D: Troubleshooting** to resolve the problem.

Command Reference

Introduction

This section describes all commands for the 1255A Enhanced Switch System in alphabetical order, providing the syntax, a description, and specific examples of usage.

Syntax Notations and Conventions

The following conventions are used in the command syntax descriptions:

- Command syntax descriptions are in *italics*. Examples of input and output strings to and from the 1255A are in `courier type`.
- A vertical bar (/) separates required items in the command.
- Items enclosed in brackets, ([ ]), are optional.
- Items enclosed in a greater-than/less-than pair, (< >), are to be replaced by the value specified in the syntax description.
- All characters not enclosed within greater-than/less-than pairs are literal characters that are used directly in the command. Although alphabetic characters are represented in the syntax using upper-case letters, case does not matter in the actual command string sent to the 1255A.
- A series of dots (...) indicates that the preceding sequence of items may be repeated indefinitely.
- All output strings from the 1255A are terminated by an ASCII carriage return (ASCII 13 decimal) followed by line feed (ASCII 10 decimal).

CLOSE

Syntax:

[CL]OSE <relay designator>[;<relay designator>...]

<relay designator> =
<module address>.<relay range>[,<relay range>...]

<relay range> =
<module specific>[-<module specific>]

<module address>=
A number specifying the address of the switch module that contains the relay to be closed. Valid addresses range from 1 through 4, inclusive.

<module-specific>=
A number specifying which switch or switches are to be closed. See the appropriate section of **Appendix E: Modules** for the syntax of a specific module.

Description:

This command causes the specified switch or group of switches to be closed. For a double-throw type switch (relay), the normally-open contacts will be closed and the normally-closed contacts will be opened. See the appropriate section of **Appendix E: Modules** for a correlation between bank and switch numbers and actual paths closed.

If the Confidence mode is enabled and a switch fails the confidence check, a GPIB Service Request (SRQ) event is generated and an error 51 is reported in response to the *YERR* command.

Example:

If a 1260-13 switch module has its address set to 2, then sending the following command:

```
CL 2.1,3
```

will close switches 1 and 3. The following command:

```
CL 2.5-7
```

will close switches 5, 6, and 7.

CNF

Syntax: *CN[F] ON / OFF*

Description: This command turns the Confidence Mode on or off. While the Confidence Mode is on, the firmware checks that the states of all switches are correct after executing each command that modifies their states. An incorrect state detected by Confidence Mode causes the 1255A to set the Programming Error bit in the GPIB status byte and assert the GPIB Service Request (SRQ). The error number may be obtained from the 1255A by sending the *YERR* command. The error code associated with a Confidence Mode failure is error 51.

The default (power-up) state for the Confidence Mode is OFF. Send the command `PSETUP 0` determine whether Confidence Mode is ON or OFF.

Example: Sending the command:

```
CNF ON
```

will enable the confidence mode. A subsequent failure of the hardware will cause GPIB SRQ to be asserted. A *YERR* command would then return the error code:

```
2.51
```

(assuming that the switch module address is 2).

> **NOTE**
>
> **Only the fact that a Confidence Mode failure has occurred can be reported. The specific relay that failed is not reported. Contact Customer Support (see Section 7: Customer Support) for service if Confidence Mode failures occur.**

DLY

Syntax:

DL[Y] <delay time>

<delay time>=
Amount desired delay in milliseconds. (0-62000)

Description:

This command specifies the amount of time delay between closing relays and issuing a sync pulse. Normally, the 1255A issues a sync pulse at the SYNC/TRIG connector immediately following the opening or closing of each relay. Specifying a delay time causes the 1255A to wait the specified amount of time before issuing a sync pulse. See the *SYNC* command description for further information about how to enable and disable the SYNC function. The default (power-up) state of the SYNC function is OFF. Send the command `PSETUP 0` to determine the current delay value.

Example:

Sending the command:

```
DLY 50
```

will set the delay time to 50 milliseconds.

EOI

Syntax:

EO[I] 0 / 1

<equate list>=

Description:

The EOI command is used to control when the EOI bit is set during multiple line outputs from the 1255A. The GPIB Resource Manager would normally assert or de-assert the GPIB EOI line in response to the state of this bit. The 1255A allows the user to specify when the EOI bit is set during multiple line outputs. Send the command `PSETUP 0` to determine the current EOI setting.

The command `EOI 0` causes the EOI bit to be asserted at the end of each line of a multi-line data output by the Option 01. This is the default (power-up) condition.

The command `EOI 1` causes the EOI bit to be asserted only following the last character of the entire multiple line output.

Example 1:

Sending the commands:

```
EOI 0
PDATAOUT 0
```

will cause the 1255A to respond with the following character strings, each terminated with a carriage return and line feed with the EOI bit set at the line feed of each line:

```
000. MODEL 1255A UNIVERSAL SWITCH CONTROLLER
000. OS REV 26.1 1255A
000.END
```

Example 2:

Sending the commands:

```
EOI 1
PDATAOUT 0
```

will cause the 1255A to respond with the following character strings, each terminated with a carriage return and line feed (the EOI bit will be set only at the end of the last line of text):

```
000. MODEL 1255A UNIVERSAL SWITCH CONTROLLER
000. OS REV 26.1 1255A
000.END
```

EQUATE

Syntax:

EQU <equate list>

<equate list>=
<address range>[,<address range>]

<address range>=
<address>;<address>[;<address>...]

or:

<address>-<address>

Description:

The *EQUATE* command provides a shortcut when identical switching commands would be sent to multiple switch modules. When two modules are equated, a command explicitly sent to one module in the equate list is automatically sent to all modules in the equate list.

All switching modules must be of the same model number in order to be accepted in the same equate group. Otherwise, the 1255A will generate an error condition.

When an equate list is entered, all switch modules on the list adopt the state of the first module that appears in the list.

To cancel all equate groups, send `EQU 0`.

Example 1:

Sending the commands:

```
EQUATE 1;2
CLOSE 1.5
```

will cause relay 5 on module 1 and relay 5 on module 2 to close.

Example 2:

More than one equate list can be defined by a single EQUATE command. The following command:

```
EQUATE 1;2,3;4
```

equates module 1 with module 2, and also equates module 3 with module 4. Sending the following subsequent command:

```
CLOSE 1.3;3.5
```

will close relay 3 on module 1, relay 3 on module 2, relay 5 on module 3, and relay 5 on module 4.

Example 3:

Suppose the following command sequence is sent:

```
CLOSE 1.4
EQUATE 1;2
```

The first command will close relay 4 on module 1. The second command will equate modules 1 and 2. When this *EQUATE* command is executed, module 2 will adopt the state of module 1, i.e. relay 4 on module 2 will close.

EXCL

Syntax:

EX[CL] <exclude group>[E;<exclude group>...]

<exclude group>=
<relay designator>[,<relay designator>...]

<relay designator> =
<module address>.<relay range>[,<relay range>...]

<module address>=
A number specifying the address of the switch module containing the switch to be opened. Valid addresses range from 1 through 4, inclusive.

<relay range> =
<module specific>[-<module specific>]

<module-specific>=
A number specifying which switch on the switch module is to be opened. See the appropriate section of **Appendix E: Modules** for the syntax of a specific module.

Description:

This command causes the 1255A to regard the channels specified in each exclude group as mutually exclusive. If a command is sent to close a relay that is part of an exclude group, the firmware opens any other previously closed relay that is part of the same exclude group. The sequence in which the previous relay is opened and the new relay is closed depends on the Sequence Mode (BBM, MBB, or IMM).

More than one exclude group may be specified in an EXCL command by separating the exclude groups with the letter E and a semi-colon (E;). Each EXCL command overwrites any previously entered exclude list. A single *<exclude group>* of 0 may be used to clear the exclude list. The exclude list may contain a maximum of 127 *<switch range>* elements. Send the command `PSETUP 0` to determine the current state of the exclude list.

Example:

Sending the command:

```
EXCL 1.1,3E;1.4-8
```

will create two exclude groups. The first will be comprised of switches 1 and 3 of module #1. The second exclude group will be comprised of all switches from switch 4 to switch 8 of module #1. Assuming that switches 1 and 4 are already closed, sending the command:

```
CLOSE 1.5
```

will open switch 4 (it is in the same exclude group as switch 5), close switch 5, and leave switch 1 undisturbed (switch 1 is in a separate exclude group).

OPEN

Syntax:

[OP]EN <relay designator>[;<relay designator>...]

<relay designator> =
<module address>.<relay range>[,<relay range>...]

<relay range> =
<module specific>[-<module specific>]

<module address>=
A number specifying the address of the switch module containing the switch to be opened. Valid addresses range from 1 through 4, inclusive.

<module-specific>=
A number specifying which switch on the switch module is to be opened. See the appropriate section of **Appendix E: Modules** for the syntax of a specific module.

Description:

This command causes the specified switch or group of switches to be opened. For a double-throw type switch, the normally-closed contacts will be opened and the normally-open contacts will be closed. See the appropriate section of **Appendix E: Modules** for the correlation between banks and switch numbers and the actual paths opened.

If the Confidence Mode is enabled and a switch fails the confidence check, a GPIB Service Request (SRQ) event is generated and an error 51 is reported in response to a *YERR* command.

Example:

If a 1260-13 has its address set to 2, then sending the following command:

```
OP 2.1,3
```

will close switches 1 and 3. The following command:

```
OP 2.5-7
```

will then close switches 5, 6, and 7. If the following command were then sent:

```
OP
```

then all switches would be opened.

PDATAOUT

Syntax:

PD[ATAOUT] <address>

Description:

The *PDATAOUT* command causes the 1255A to return the data associated with specified switch modules, the 1255A, or both, depending on the *<address>* parameter.

When sent with an address of 0, the command causes the 1255A to return the revision level of its operating firmware. The general form of this information is as follows:

```
000. MODEL 1255A UNIVERSAL SWITCH CONTROLLER
000. OS REV <firmware revision> 1255A
```

where:

<firmware revision>= The revision level of the firmware (26.1 or greater).

When used with a module address within the range of 1 through 12, this command causes the 1255A to return the switch closure information for the module or modules specified by *<address>*. The general form of the information is as follows:

```
<addr>. <model number><description>
<addr>. [<module-specific>,...]
<addr>.END
```

where:

<addr>=
The module address as set by its DIP switches.

<model number>=
The model number of the switch module.

<description>=
A description of the relay organization structure, such as the number of banks and number of relays per bank.

<module-specific>=
A listing of the relays that are closed. See Section E: Modules for the module-specific for a specific module.

If many switches on the module are closed, the relay listing may require multiple lines. If the last character of the line is a comma, then another line will immediately follow with a continuation of the relay listing.

Example:

The following is a sample output from a `PDATAOUT 0-4` command:

```
000. MODEL 1255A UNIVERSAL SWITCH CONTROLLER
000. OS REV 26.1 1255A
001. 1260-40A 4X24 SIGNAL MATRIX MODULE
001. 1,4
002. 1260-40A 4X24 SIGNAL MATRIX MODULE
002. 9
003. 1260-40A 4X24 SIGNAL MATRIX MODULE
003. 1,2
004. 1260-40A 4X24 SIGNAL MATRIX MODULE
004.
004.END
```

In this example, the response indicates:

The firmware revision is 26.1.

The 1260-40 module with address 1 has switches 1 and 4 closed.

The 1260-40 module with address 2 has switch 9 closed.

The 1260-40 module with address 3 has switches 1 and 2 closed.

The 1260-40 module with address 4 has no switches closed.

PSETUP

Syntax:

PS[ETUP] <module range>

<module range>=
<module address>[-<module address>]

<module address>=
address of module for which to report setup status. Use 0 for status of Switch Controller. Use a number from 1 through 4 for switch module status. For status of multiple modules, specify range of module addresses (e.g. 0-4).

Description:

This command causes the 1255A to report the conditions of the setup variables. This includes the Confidence, Delay, EOI, Equate List, Scan, Scan List, SRQmask, Sync, TTLtrg, and Puprcl variables, as well as the sequence mode (break-before make, make-before-break, or immediate). For additional information regarding a setup variable, see the command description for that variable.

Example:

The following is a sample output received after sending the command `PSETUP 0-1`, showing the power-up default conditions for the 1255A Switch Controller and the 1260-40 Switch Module:

```
000. MODEL 1255A UNIVERSAL SWITCH CONTROLLER
000. OS REV 26.1 1255A
000. CNF OFF
000. DLY 0
000. EOI 0
000. EQU
000. EXCL
000. SCAN ON
000. SLIST 0
000. SRQMASK 40
000. SYNC 8
000. TTLTRG OFF
000. PUPRCL OFF
001. 1260-40A 4X24 SIGNAL MATRIX MODULE
001. MBB
001.END
```

PUPRCL

Syntax:

PU[PRCL] ON / OFF

Description:

This command enables or disables the power-up recall feature. If power-up recall is enabled, the firmware will automatically recall the switch configuration stored in non-volatile memory location #1 each time power is applied to the 1255A. To store a relay configuration in non-volatile location #1, first close the desired relays and then send the command `STORE 1`. Use the command `PSETUP 0` to determine whether power-up recall is currently enabled or disabled.

> **NOTE**
>
> **If non-volatile location #1 is not defined and PUPRCL is ON, no recall will take place at power up.**

Example:

Sending the command:

```
PUPRCL ON
```

will enable the power-up recall feature. The next time power is applied to the module, the relays will be restored to the configuration previously stored in non-volatile memory location #1.

RECALL

Syntax:

REC[ALL] <non-vol location>

<non-vol location>=
1 | 2 | ... | 50

Description:

This command will set the switches to the configuration stored in the specified non-volatile location. There are 50 non-volatile memory locations, numbered from 1 through 50. A relay configuration may be stored in a non-volatile location by closing the desired relays and then sending a *STORE* command. Note that an error (code 58) is generated if an attempt is made to recall from an empty location. Also, the Exclude function is not enforced during non-volatile memory recall operations, so care must be used when storing relay configurations to ensure that undesirable configurations do not occur.

Example:

Assume that the configuration stored in non-volatile memory location #10 calls for switch 1 to be closed and all others open. Also assume that switch 5 is currently closed and all others open. Under these conditions, sending the command:

```
RECALL 10
```

will cause switch 5 to open and switch 1 to close.

RESET

Syntax: *RES[ET]*

Description: This command causes the 1255A to reset, opening all relays on the switch modules and setting all setup variables (excluding the Puprcl variable) to their default states. See the *PSETUP* command for information regarding the default states of the setup variables.

If the 1255A is connected to the controller via RS-232 interface, a reset operation may also be commanded simply by pressing the ESCape key on the controller (host computer).

> **NOTE**
>
> **Be sure to allow sufficient time for the reset to be processed before sending the next command to the 1255A. The safest method is to poll the GPIB status byte until the ready bit goes true, indicating that the reset operation has completed. Allow at least 40 milliseconds before the first poll to allow the firmware to begin the reset operation.**

SCAN

Syntax: *SC[AN] ON / OFF / CONT*

Description:

This command enables or disables the scanning feature. When scanning is enabled, the 1255A opens and closes the relays on the switch modules as specified in the scan list when a trigger pulse is sensed at the SYNC/TRIG connector. See the *TTLTRG* command for information about enabling the trigger function. To execute a scanning sequence, perform the following steps:

- Define a scan list via the *SLIST* command.
- If triggering from a signal at the SYNC/TRIG connector, enable this function by sending the command `TTLTRG ON`.
- Enable the scan function by sending the command `SCAN ON`.
- Assert the appropriate trigger signals at the SYNC/TRIG connector when desired.

Each time a trigger pulse is received at the SYNC/TRIG connector, the firmware performs the next operation specified by the scan list, and applies a sync pulse to the SYNC/TRIG connector when the operation has completed. When the last command in the scan list has been executed, a subsequent trigger pulse causes scanning to continue at the first item on the scan list (the scan sequence loops back to the beginning).

Three types of operations may be specified in a scan list:

- A specific relay may be closed
- A non-volatile memory location may be recalled
- A breakpoint may occur (pauses execution of the scan list)

In addition, if the previous scan operation called for closure of a specific relay, the relay is opened prior to performing the current scan operation. For example, if a scan operation closes relay 2.6, then relay 2.6 will be opened immediately prior to executing the next operation specified in the scan list.

See the *SLIST* command description for information regarding the format of the scan list.

NOTE

Relays that are closed "manually" (via *CLOSE* or *RECALL* commands), either prior to or during scanning operations, may be affected by scan list execution. For example, a manually-closed relay may be opened when the a non-volatile memory recall is executed. It will also be opened if the scan list commands it closed and then commands a different relay closed (when the scan list closes a relay, it opens the previous relay that it closed). Care must be taken when setting up the scan list if manually-closed setups need to be preserved during scanning operations.

Sending the command `SCAN ON` enables scanning to start at the first entry in the scan list. Each time a trigger pulse is received at the SYNC/TRIG connector, the firmware performs the next operation specified by the scan list. Scanning will continue for as long as trigger pulses are are received, until either a breakpoint is reached in the scan list or the command `SCAN OFF` is manually sent from the controller. Note that reaching a breakpoint in a scan list has the same effect as manually sending the command `SCAN OFF`.

After a breakpoint is executed, sending the command `SCAN CONT` causes scanning to resume at the scan list entry immediately following the breakpoint. Also, if scan list execution is stopped by sending `SCAN OFF`, then sending `SCAN CONT` will cause scanning to resume with the scan list entry immediately following the last entry executed.

Sending the command `SCAN OFF` disables the scan function from responding to received trigger pulses. It does not affect the current position within the scan list. Any triggers that occur while the scan feature is disabled are lost. To resume scanning, send `SCAN ON` or `SCAN CONT`.

Note that sending `SCAN OFF` does not open any of the relays closed in the previous scan operation. This may cause an undesirable effect if `SCAN ON` is sent immediately after sending `SCAN OFF`. If it is desirable to stop and re-start a scan function, it may be necessary to open any relays left closed by the previous scan. Send the command `PSETUP 0` to determine the current states of the relays.

Examples:

For examples of the use of the *SCAN* command, refer to the *SLIST* command.

SETUP

Syntax: *SE[TUP] <module address>.<seqmode>*

<module address>=
address of module for which to change the sequence mode. Use a number from 1 through 4 corresponding to the address of the desired switch module.

<seqmode>= The desired sequence for opening and closing relays. Three sequence modes are supported: *BBM* (break-before-make), *MBB* (make-before-break), and *IMM* (immediate without regard to sequence).

Description: This command controls the sequence in which relays are opened and closed when more than one relay has been commanded to change. The three sequence modes are:

- *IMM* (Immediate). Causes channels (relays) to be opened and closed as quickly as possible. The sequence of opening and closing is indeterminate. In this mode, care must be taken to avoid damaging equipment while the relays are in transition, i.e. by short circuiting power supplies, connecting high-power outputs together, or applying excessive power to low-impedance inputs.
- *BBM* (Break Before Make). Causes existing channel closures to be opened before new channel closures are made. BBM is the default mode on power-up, or after the 1255A has been reset.
- *MBB* (Make Before Break). Causes new channel closures to be made before existing channel closures are opened.

Example: Consider the following command sequence:

```
SETUP 1.BBM
EXCL 1.1-5
CLOSE 1.4
CLOSE 1.5
```

The first command sets the sequence mode for module #1 to break-before-make. The second command defines an exclude list consisting of relays 1 through 5 on module #1. The third command closes relay 4 on module #1. Since relays 4 and 5 on module #1 are in the same exclude group, the last command will open relay 4 and then close relay 5. Note that the sequence, break-before-make, complies with the sequence defined in the first command.

SHS

Syntax: *SHS ON / OFF*

Description: This command enables or disables software handshaking for the RS-232 interface. The command `SHS ON` enables software handshaking. With software handshaking enabled, the 1255A will send an *XOFF* character (ASCII 19_{10}) to the host computer or modem when it needs a pause in the serial data stream in order to process it. When the 1255A is ready for more data, it will send an *XON* character (ASCII 17_{10}) to the host computer or modem. Also, the host computer or modem may send an *XOFF* character to the 1255A to pause serial data transmission by the 1255A. Once the host computer or modem is ready for more serial data, it may send an *XON* character to the 1255A to resume serial data transmission.

In addition to sending the 1255A the `SHS ON` command, the host computer or modem must have its own software handshaking enabled so that it will respond properly to the *XOFF* and *XON* characters from the 1255A. Consult the user manual for your equipment to determine how to enable software handshaking.

The command `SHS OFF` disables software handshaking for the 1255A. The 1255A will then receive serial data without sending *XOFF* or *XON* flow control characters, and will send serial data to the host computer without regard for any flow control characters received.

Serial handshaking is strongly recommended to ensure that all serial data is properly transferred without either device overruning the other.

The *SHS* command has no effect when the GPIB interface is in use.

Example:

```
SHS ON
```

This command will enable serial handshaking, so that the 1255A will send an *XOFF* character when it needs time to process serial data it has received, and will send an *XOFF* character when it is ready for more serial data.

SLIST

Syntax:

SL[IST] <scan element>[;<scan element>;...]

<scan element>=
<relay number> | <non-vol range> | <breakpoint>

<relay number>=
<module-specific>. Refer to the appropriate section of **Appendix E: Modules** for syntax of specific switch modules.

<non-vol range>=
<non-vol location>[-<non-vol location>]

<non-vol location>=
1 | 2 | ... | 50

<breakpoint>=
0

Description:

This command defines the scan list to be used during scanning operations. When scanning is enabled, the 1255A opens and closes relays on the switch modules as specified in the scan list as trigger pulses are sensed at the SYNC/TRIG connector. See the *TTLTRG* command description for additional information about how to enable the trigger function.

To use a scan list, perform the following steps:

- Define the scan list via the *SLIST* command.
- If triggering from a signal at the SYNC/TRIG connector, send the command `TTLTRG ON` to enable triggering.
- Enable the scan function by sending the command `SCAN ON`.
- Assert the appropriate trigger signals at the SYNC/TRIG connector when desired.

Each time a trigger occurs, the next operation in the scan list is executed and, if the SYNC function has been enabled by sending the command `SYNC ON`, a sync pulse is asserted at the SYNC/TRIG connector. When the last entry in the scan list has been executed, a subsequent trigger pulse causes scanning to continue with the first item in the scan list. If this type of looping is not desired, place a breakpoint command at the end of the scan list.

Three types of operations may be specified in a scan list:

- A specific relay may be closed
- A non-volatile memory location may be recalled

- A breakpoint may be executed

In addition, if the previous scan operation was a specific relay closure, that relay will open before the current scan operation is executed.

When the scan list consists of a series of specific relay closures, each trigger pulse received causes the next relay in the scan list to close. Immediately before executing each scan operation, the relay closed by the preceding operation is opened. It is legal to include relays in the scan list that are part of an exclude group (see *EXCLUDE* command). When one of those relays are closed during a scan operation, any previously closed relay that is part of the same exclude group will open.

When the scan function encounters a series of non-volatile memory recalls, it responds by performing a recall of each non-vol location in turn each time a trigger is received. See the *RECALL* command for more information regarding the rules concerning non-volatile memory recall. Note that when a scan operation recalls a non-volatile memory location, subsequent trigger pulses do not cause the relays closed during the recall operations to open automatically as with explicit relay closure operations. This makes the non-volatile memory recall entry useful for setting the relays to a predefined state prior to scanning through a group of relays.

When scan list execution reaches a breakpoint, scanning is immediately disabled, causing subsequent trigger pulses to be ignored. It also causes the Scan List at Break Point bit (bit 4) in the status word to be set true. If the SRQ mask is set to enable an SRQ on this bit, then an SRQ event on the GPIB resource manager is also generated. Scanning will not resume until either `SCAN ON` or `SCAN CONT` is sent. Refer to the *SCAN* command description for more information.

Note that each *SLIST* command overwrites any previously entered scan list. To clear the scan list, send the command `SCAN 0`. The scan list is also cleared when the 1255A is reset.

The maximum total number of <switch range>, <non-vol range>, and <breakpoint> elements in a scan list is 85. Use the command `PSETUP 0` to determine the current value of the scan list.

Example 1:

Based on the 1260-13 Switch Module at address 1:

Action	Result
Send the command: `SLIST 1.3, 4, 6`	Scan list defined with 3 relays (1.3, 1.4, 1.6)
Send the command: `SCAN ON`	Scan list is active
Assert a trigger pulse at SYNC/TRIG connector	Relay 1.3 is closed
Assert a trigger pulse at SYNC/TRIG connector	Relay 1.3 is opened; relay 1.4 is closed
Assert a trigger pulse at SYNC/TRIG connector	Relay 1.4 is opened; relay 1.6 is closed
Assert a trigger pulse at SYNC/TRIG connector	Relay 1.6 is opened; relay 1.3 is closed (scan list loops back to beginning)
Send the command: `SCAN OFF`	Scanning is disabled
Assert a trigger pulse at SYNC/TRIG connector	No action

Example 2: **Based on the 1260-13 Switch Module at address 1:**

For this example, assume that non-volatile memory location 5 has only the following relays closed: 1.10, 1.11

Action	Result
Send the command: `SLIST 1.4;5; 1.6, 1.7;0; 1.9`	Scan list defined with 4 relays (1.4, 1.6, 1.7 and 1.9) a non-volatile state to recall (5), and a breakpoint (0)
Send the command: `SCAN ON`	Scan list is active
Assert a trigger pulse at SYNC/TRIG connector	Relay 1.4 is closed
Assert a trigger pulse at SYNC/TRIG connector	Relay 1.4 is opened; Non-volatile memory location 5 is recalled (relays 1.10 and 1.11 are closed)
Assert a trigger pulse at SYNC/TRIG connector	Relay 1.6 is closed
Assert a trigger pulse at SYNC/TRIG connector	Relay 1.6 is opened; relay 1.7 is closed
Assert a trigger pulse at SYNC/TRIG connector	The "Scan List at Break Point" bit (bit 4) is set in the status byte
Assert a trigger pulse at SYNC/TRIG connector	No action
Send the command: `SCAN CONT`	Scanning is resumed
Assert a trigger pulse at SYNC/TRIG connector	Relay 1.9 is closed
Assert a trigger pulse at SYNC/TRIG connector	Relay 1.9 is opened; relay 1.4 is closed

Note:

At the end of this sequence, relays 1.10 and 1.11 are still closed because they were recalled from non-volatile memory. Also, relay 1.7 is still closed because its closure was immediately followed by a breakpoint, not another relay closure.

SRQMASK

Syntax:

SR[QMASK] <mask value>

<mask value>=

An 8-bit binary number that controls which status word bits will cause the SRQ bit to be asserted. The SRQ mask is specified by its decimal equivalent. Legal values are in the ranges of 32-63, 96-127, 160-191, and 223-255.

Description:

This command defines the circumstances under which the SRQ bit on the GPIB Resource Manager will be asserted. This is controlled by the SRQ mask value. The SRQ mask is an eight-bit binary number. Each bit corresponds to a specific type of event. If a bit is set to 1, then the event that the bit represents is enabled for setting SRQ. The bits in the SRQ mask, and their corresponding events, are as follows:

Bit Number	Bit Value	Description
0 (LSB)	1	Unused
1	2	Unused
2	4	Unused
3	8	Scan List at Break Point
4	16	Ready
5	32	Programming Error
6	64	Service Requested
7 (MSB)	128	Unused

When sending the SRQMASK command, the SRQ mask value is specified as a decimal number. This number is obtained by summing the bit values of each SRQ mask bit that is set to 1.

Whenever the firmware detects a change in the status byte (when one of the events in the above table occurs), the status byte is ANDed with the SRQ mask. If the result is non-zero, then the SRQ bit is asserted. Note that a programming error (bit 6) cannot be masked. Therefore, some SRQ mask

values are illegal. Legal SRQ mask values fall in the ranges of 32-63, 96-127, 160-191, and 223-255. The power up (default) value of the SRQ mask is 40, i.e., if either a "Programming Error" or "Scanlist at Break Point" event occurs, SRQ will be asserted. Use the command `PSETUP 0` to determine the current value of the SRQ mask.

Example 1:

Sending the command:

```
SRQMASK 32
```

will allow an SRQ event only if the Programming Error bit was set true.

Example 2:

Suppose it is desired that the 1255A issue an SRQ event when any of the following conditions occur:

- Programming error
- Ready
- Scan List at Breakpoint

From the above table, the corresponding bits are 3, 4, and 5. Their bit values are 8, 16, and 32, respectively. The sum of these bit values 56. Therefore, the appropriate command to send to the 1255A is:

```
SRQMASK 56
```

STORE

Syntax:

ST[ORE] <non-vol location>

<non-vol location>= 1 | 2 | ... | 50

Description:

This command stores the current states of all relays on all switch modules in the specified non-volatile memory location. There are 50 non-vol memory locations, numbered from 1 through 50. A relay configuration may be recalled from a non-vol location by including the non-vol location number in a scan list or by sending the appropriate *RECALL* command. Refer to the command descriptions for the *RECALL*, *SCAN*, and *SLIST* commands for detailed information. Note that storing to a non-empty non-vol location overwrites the contents of that location.

Example:

Sending the command:

```
STORE 10
```

would store the current relay configuration in non-volatile memory location #10.

SYNC

Syntax:

SY[NC] ON / OFF

Note that this command is formatted slightly differently from the SYNC command for the 1260 Universal Switch Controller. The 1260 TTLTRG command requires a decimal number that specifies which of the eight VXI TTLTRIG lines to trigger from. Since only one trigger source exists on the 1255A, its TTLTRG command requires only the word ON or OFF.

Description:

This command enables or disables the synchronization pulse that is asserted at the SYNC/TRIG connector at the end of each relay operation. After the command `SYNC ON` is sent, a sync pulse is output following each command or operation that modifies the state of the relays. This includes *OPEN*, *CLOSE*, and *RECALL* commands, as well as scanning operations.

By connecting the SYNC OUT signal to the TRIG IN signal (on the SYNC/TRIG connector), it is possible to have the 1255A re-trigger itself after each operation is completed. This feature can be used in conjunction with a scan list to cause several relays to be closed in sequence without any other outside stimulus.

Note that the sync pulse may be delayed by use of the *DLY* command. See the description of the *DLY* command for more information. Use the command `PSETUP 0` to determine the state (enabled or disabled) of the sync feature.

Example 1:

Sending the command:

```
SYNC ON
```

will enable the 1255A to send sync pulses.

Example 2:

Sending the command:

```
SYNC OFF
```

will disable the 1255A from sending sync pulses.

TEST

Syntax:

TEST 0.<test number>

<test number>=
1 | 2 | 3

Description:

This command causes the 1255A to execute one of its self tests. The available tests are:

- Non-Destructive RAM Test. This tests all locations in the RAM memory by writing and verifying test patterns. Since this test is non-destructive, the contents of RAM memory will be the same after the test as they were before the test was run. Thus, none of the 1255A settings or modes will be affected by running this test.

- EPROM Checksum Test. This calculates the EPROM checksum and compares it with the checksum stored in EPROM. This detects faulty EPROMS and verifies that all EPROMS are of the same revision level.

- Non-Destructive Non-Volatile Memory Test. This tests all memory locations in the non-volatile memory by writing and verifying test patterns. Since this is a non-destructive test, the contents of all memory locations will be the same after the test as they were before the test was begun.

The *YERR* command must be used to determine whether the self-test passed or failed. If the 1255A self-test passed, the 1255A returns an error code of 00. If the test failed, the 1255A returns an error code corresponding to the failed test. Refer to **Appendix B: Error Messages** for a listing of error codes and their meanings.

Example:

Sending the command:

```
TEST 0.3
```

will run the non-vol memory test. If the non-vol memory has not yet been initialized, this test will erase the current contents of the non-vol memory, otherwise it will run a non-destructive test on the non-vol memory. The results of the test can be determined by sending the command `YERR`. The error code returned by the 1255A will determine whether the test passed (error code 00) or failed.

NOTE

If non-vol memory initialization is required, use the `TEST 0.3` command to perform the initialization. Non-vol initialization need only be performed after a firmware upgrade, or if corruption of the non-vol memory has been detected. If neither of these conditions have occurred, the `TEST 0.3` command will not re-initialize the non-vol memory. If non-vol memory initialization is required, the contents of the non-vol are invalid and will be erased during initialization.

TTLTRG

Syntax:

TT[LTRG] ON / OFF

Note that this command is formatted slightly differently from the TTLTRG command for the 1260 Universal Switch Controller. The 1260 TTLTRG command requires a decimal number specifying which of the eight VXI TTLTRIG lines to trigger from. Since the 1255A has only one trigger source (at the SYNC/TRIG connector), the 1255A TTLTRG command requires only the word ON or OFF.

Description:

This command enables or disables external triggering during scan operations. To enable triggering, send the command `TTLTRG ON`. To disable triggering, send `TTLTRG OFF`. When a scan list has been defined and scanning is enabled, each trigger pulse causes the 1255A to sequence to the next item on the scan list. See the command descriptions for *SLIST* and *SCAN* for detailed information related to scan operations.

Example:

Sending the commands:

```
TTLTRG ON
SCAN ON
SLIST 1.1-20;0
```

will cause trigger pulses to control sequencing through the scan list that is specified by the last line.

YERR

Syntax: *YERR*

Description: This command causes the 1255A to return the error code for the first error that occurred after the preceding *YERR* command. This error code is associated with either the Programming Error bit in the status word or a self test failure. The general form of the error code that is returned is as follows:

error <module address>.<error code>

where:

<module address>=
000 - 012 | XXX

<error number>=
Error code (see **Appendix B: Error Messages**)

The module address is 000 for errors associated with the 1255A. For errors associated with one of the switch modules, the module address will be the address of the affected module. Sending the `YERR` command clears the Programming Error bit in the status word. Sending the `YERR` command after the Programming Error bit has been cleared, or when no error has occurred, will result in the 1255A returning an error code of 000.00.

Error Messages

Error Messages

When you send the *YERR* command, the 1255A responds with the error code of the first error that occurred afer the last *YERR* command was sent. If no errors have occurred, then the error code is 00. The following is a list of all error codes and their meanings:

Number	Description
00	No error occurred
01	Invalid module number specified
02	Specified module not installed
03	Invalid channel number specified
04	Invalid port number specified
05	Command syntax error
06	Value read is larger than expected
07	Function not supported by module
08	Expected line terminator not found
09	Valid command not found
10	Module ID out of range. Set it to 1 thru 4.
11	Module not compatible with switching system due to voltage requirements
20	EXCLUDE list too long
21	Channel entered on EXCLUDE list twice
22	Module does not support EXCLUDE function
23	SCAN list too long
24	Module does not support SCAN function
25	EQUATE list too long
26	Module entered on SCAN list twice
27	Incompatible modules equated or digital modules invalid
30	Non-overlap mode invalid
31	SRQMASK invalid
40	Not a valid test number
41*	RAM test failure
42*	ROM test failure
43*	Non-volatile memory test failure
44*	EPROMS contain incompatible operating system or software revisions
45*	Self-test failure of CPU or related circuitry
46*	Self-test failure of 24-volt supply
47*	Self-test failure of timer IC
48*	Insufficient RAM for installed modules
49*	EPROM checksum error
50*	Option module EPROM incompatible with CPU EPROM

Number	Description
51*	Failed confidence test (99 = passed check)
55	Error STOREing to non-vol memory
56	Error RECALLing from non-vol memory
57	Non-vol storage location number out of range
58	Attempted RECALL from empty non-vol location
59	Non-vol memory not initialized
70	Handshake error on digital I/O
99	Passed confidence check (51 = failed check)

* Fatal error. See **Appendix D: Troubleshooting** if fatal error occurs.

Introduction

This section contains reference documents for use in maintaining the 1255A switch system:

- Calibration
- Performance Verification
- Drawings
- Parts Lists

Calibration

Calibration of the 1255A Switch Controller is not required. If failures have indicated a need to calibrate the 1255A return it to Racal Customer Service - See **Customer Support Section** of this manual for service details.

Performance Verification

Introduction

For effective use, the operator must have a thorough knowledge of this procedure, the test equipment used, and the product under test. This information should be obtained by reference to the appropriate equipment manuals and by reviewing this procedure prior to starting.

WARNING

There is a risk of fatal electric shock in performing this procedure.

Follow all instructions. Do NOT proceed if you do not understand.

Report damaged insulation or other observed dangers to supervision. Do NOT proceed until you are sure it is safe to do so.

Observe all precautions pertaining to the handling of electrostatic-sensitive devices to avoid damage caused by Electro-Static Discharge. Handling of static sensitive devices must be performed at work stations designated as static-free.

Power Supply Assembly

Required Equipment

The following equipment, or equivalent, is required to perform this procedure.

- 3½-Digit DVM, RDII Model 2000
- Oscilloscope, Tektronix 465

Setup

1. Remove any switch modules from the 1255A.
2. Referring to **Section 2 under Main AC Power**, ensure that the proper capacity fuse is installed in the 1255A. For 100 VAC to 120 VAC operation, the fuse must have a 5-amp rating. For 200 VAC to 230 VAC operation, the fuse must have a 2.5-amp rating.
3. Verify that the 1255A rear-panel power switch is in the "0" (OFF) position. Verify that the 1255A front-panel power switch is in the down (OFF) position.
4. Connect AC power to the 1255A AC power input connector on the rear panel.

Procedure

> **NOTE**
>
> **The current limit set point of the power supply is adjusted at the factory. This adjustment should not be made in the field.**

Fan Test

1. Verify that the rear-panel power switch is not turned on.
2. Set the rear-panel power switch to the "1" (ON) position, but leave the front-panel power switch in the down (OFF) position.
3. Verify that the rear-panel power switch is at the "1" (ON) position, but that the fan does not turn on.
4. Set the front-panel power switch to the up (ON) position.
5. Verify that the fan turns on.
6. Set the front-panel power switch to the down (OFF) position.

7. Verify that the fan turns off, and that the rear-panel power switch remains ON.

8. Set the front-panel power switch to the up (ON) position.

9. Verify that the fan turns on and that the rear-panel power switch remains ON.

DC Supply Voltage

1. Set the DVM to the 20 VDC range. Connect the low input of the DVM to pin J4-C3 (GND) on the 1255A backplane. Connect the high DVM input to pin J4-A25 (+5V) on the 1255A backplane.

2. Verify that the DVM reading is between 4.75 and 5.25 VDC. If the DMM reading is outside this range, contact Racal Customer Support, see **Section 7**..

3. Set the DVM to the 200 VDC range. Connect the high DVM input to pin J4-C31 (+24V) on the 1255A backplane.

4. Verify that the DVM reading is between 23.35 and 24.65 VDC. If the DMM reading is outside this range, then contact Racal Customer Support, see **Section 7**.

5. Set the DVM to the 200 VDC range. Connect the high DVM input to pin J5-C31 (+12V) on the 1255A backplane.

6. Verify that the DVM reading is between 11.76 and 12.24 VDC. If the DVM reading is outside this range, then contact Racal Customer Support, see **Section 7**.

7. Disconnect both inputs of the DVM from the backplane.

Ripple Voltage

1. Connect an oscilloscope probe to oscilloscope channel 1. Connect another oscilloscope probe to oscilloscope channel 2. Connect the ground lead from the channel 1 probe to the ground lead of the channel 2 probe.

2. Connect the channel 1 probe input to pin J4-C3 (GND) on the 1255A backplane. Connect the channel 2 probe input to pin J4-A25 (+5V) on the 1255A backplane.

3. Set the oscilloscope to invert channel 2 and to add channels 1 and 2 together (differential mode). Set the oscilloscope bandwidth limiting to 20 MHz.

4. Verify that the oscilloscope displays a noise level of less than 50 mV (P-P).

5. Connect the channel 2 probe input to pin J4-C31 (+24V) on the 1255A backplane.

6. Verify that the oscilloscope displays a noise level of less than 240 mV (P-P).

7. Connect the channel 2 probe input to pin J5-C31 (+12V) on the 1255A backplane.

8. Verify that the oscilloscope displays a noise level of less than 120mV (P-P).

Test Completion

1. Disconnect the oscilloscope probes from the 1255A backplane.

2. Set the front-panel power switch to the down (OFF) position.

3. Set the rear-panel power switch to the "O" (OFF) position.

CPU Assembly

Required Equipment (or equivalent)

The following equipment, or equivalent, is required to perform this procedure.

- Computer, with GPIB interface port, GPIB interface software, RS-232 port, and terminal emulation software.
- GPIB cable, Racal Instruments P/N 406844, 408845, or 406846
- RS-232 cable, Racal Insruments P/N 602248
- Oscilloscope, Tektronix 465
- Pulse generator, RDII Series 1500
- 3½-Digit DMM, RDII Model 2000
- Any 1260-Series switching module.

Reference Documentation

The following documentation may be useful in understanding the operation of the CPU Assembly:

- Schematic, P/N 435097

Setup

1. Set the switch module address to address 1. Install the switch module in the 1255A.

2. Ensure that the 1255A line voltage select card is oriented for the proper line input voltage.

3. Ensure that the proper capacity fuse is installed in the 1255A. For 100 VAC to 120 VAC operation, the fuse must have a 5-amp rating. For 200 VAC to 230 VAC operation, the fuse must have a 2.5-amp rating.

4. Verify that the 1255A rear-panel power switch is in the "0" (OFF) position. Verify that the 1255A front-panel power switch is in the down (OFF) position.

5. Connect AC power to the 1255A AC power input connector on the rear panel.

6. Using the GPIB cable, connect the 1255A rear-panel GPIB connector to the GPIB connector of the computer. Start the GPIB interface software on the computer.

Procedure

Self-Test

1. Set the rear-panel power switch to the "1" (ON) position. Set the front-panel power switch to the up (ON) position.

2. Verify that the front-panel FAIL and ADDR indicators illuminate and then extinguish within two seconds. Verify that the front-panel ON indicator illuminates steadily.

GPIB Interface

1. Send the following command to the 1255A via GPIB interface:

```
YERR
```

2. Verify that the 1255A returns the following message:

```
000.00
```

Local Bus

1. Send the following command to the 1255A:

```
PD 0-4
```

2. Verify that the 1255A returns a message similar to the following:

```
000. MODEL 1255A UNIVERSAL SWITCH CONTROLLER
000. OS REV 26.1 1255A
001. 1260-40A 4X24 SIGNAL MATRIX MODULE
001.
001.END
```

3. Verify that the model number given in the third line of text is the model number of the installed switch card.

RS-232 Interface

1. Terminate the GPIB interface software on the computer.

2. Disconnect the GPIB cable from the 1255A and the computer.

3. Using the RS-232 cable, connect the 1255A rear-panel RS-232 connector to the RS-232 connector of the computer. Start the terminal emulation software on the computer.

4. Set the terminal emulation software parameters as follows:

   - 8 bits
   - No parity
   - 1 stop bit
   - Baud rate 19,200

5. Set the DIP switch on the 1255A rear panel as follows:

   - Segment #1: ON
   - Segment #2: OFF
   - Segment #3: ON
   - Segment #4: ON
   - Segment #5: OFF
   - Segment #6: OFF

6. Send the following command to the 1255A:

```
PD 0-4
```

7. Verify that the 1255A returns a message similar to the following:

```
000. MODEL 1255A UNIVERSAL SWITCH CONTROLLER
000. OS REV 26.1 1255A
001. 1260-40A 4X24 SIGNAL MATRIX MODULE
001.
001.END
```

8. Verify that the model number given in the third line of text is the model number of the installed switch card.

External Sync

1. Connect the channel 1 input of the oscilloscope to pin 2 of the SYNC/TRIG connector on the 1255A rear panel. Connect the ground lead of the channel 1 probe to pin 1 of the SYNC/TRIG connector.

2. Set the oscilloscope for normal triggering, on the positive-going edge, from channel 1, with a trigger level of 2.4 VDC.

3. Send the following commands to the 1255A:

```
SYNC ON
DLY 10
CL 1.2
```

4. Verify that the oscilloscope was triggered.

5. Disconnect the oscilloscope from the SYNC/TRIG connector.

External Trigger

1. Set the pulse generator to output a single pulse having the following characteristics:

   - Output level: TTL (from 0 to 5 VDC)
   - Pulse width: 1 uS
   - Pulse direction: Positive-going

2. Connect the pulse generator output to pin 3 of the SYNC/TRIG connector on the 1255A rear panel. Connect the pulse generator ground to pin 1 of the SYNC/TRIG connector.

3. Send an *SLIST* command to the 1255A, defining a scan list of three relays for the installed switch module. Then send a `SCAN ON` command. For example, if the installed switch module is a 1260-13, the following commands would be appropriate:

```
SLIST 1.1,2,3
SCAN ON
```

4. Set the DMM for the 200 ohm range. Verify that the resistance across the first channel in the scan list is greater than 200 ohms.

5. Send a pulse from the pulse generator. Verify that the resistance across the first channel in the scan list is less than 1 ohm.

6. Send another pulse from the pulse generator. Verify that the resistance across the first channel in the scan list is greater than 200 ohms, and that the resistance across the second channel in the scan list is less than 1 ohm.

7. Send another pulse from the pulse generator. Verify that the resistance across the second channel in the scan list is greater than 200 ohms, and that the resistance across the third channel in the scan list is less than 1 ohm.

8. Disconnect the pulse generator from the 1255A SYNC/TRIG connector.

Test Completion

1. Set the front-panel power switch to the down (OFF) position. Set the rear-panel power switch to the "0" (OFF) position.

2. Disconnect AC power from the 1255A.

Final Assembly

Required Equipment (or equivalent)

The following equipment, or equivalent, is required to perform this procedure.

- Computer, with GPIB interface port, GPIB interface software, RS-232 port, and terminal emulation software.
- GPIB cable, Racal P/N 406844, 408845, or 406846
- RS-232 cable, Racal P/N 602248
- Oscilloscope, Tektronix 465
- Pulse generator, RDII 1500
- Any four 1260-Series switching modules

Setup

1. Set the switch module address of a switch module to 1, and install the switch module in slot 1 (uppermost slot) of 1255A chassis.
2. Set the address of another switch module to 2, and install the switch module in slot 2 of the 1255A chassis.
3. Set the address of another switch module to 3, and install the switch module in slot 3 of the 1255A chassis.
4. Set the address of another switch module to 4, and install the switch module in slot 4 of the 1255A chassis.
5. Ensure that the 1255A line voltage select card is oriented for the proper line input voltage.
6. Ensure that the proper capacity fuse is installed in the 1255A. For 100 VAC to 120 VAC operation, the fuse must have a 5-amp rating. For 200 VAC to 230 VAC operation, the fuse must have a 2.5-amp rating.
7. Verify that the 1255A rear-panel power switch is in the "0" (OFF) position. Verify that the 1255A front-panel power switch is in the down (OFF) position.
8. Connect AC power to the 1255A AC power input connector on the rear panel.
9. Using the GPIB cable, connect the 1255A rear-panel GPIB connector to the GPIB connector of the computer. Start the GPIB interface software on the computer.

Procedure

Self-Test

1. Set the rear-panel power switch to the "1" (ON) position. Set the front-panel power switch to the up (ON) position.

2. Verify that the front-panel FAIL and ADDR indicators illuminate and then extinguish within two seconds. Verify that the front-panel ON indicator illuminates steadily.

GPIB Interface

1. Send the following command to the 1255A via GPIB interface:

```
YERR
```

2. Verify that the 1255A returns the following message:

```
000.00
```

Local Bus

1. Send the following command to the 1255A:

```
PD 0-4
```

2. Verify that the 1255A returns a message similar to the following:

```
000. MODEL 1255A UNIVERSAL SWITCH CONTROLLER
000. OS REV 26.1 1255A
001. 1260-40A 4X24 SIGNAL MATRIX MODULE
001.
002. 1260-40A 4X24 SIGNAL MATRIX MODULE
002.
003. 1260-40A 4X24 SIGNAL MATRIX MODULE
003.
004. 1260-40A 4X24 SIGNAL MATRIX MODULE
004.
004.END
```

3. Verify that the addresses and model numbers given correspond with the actual model numbers of the installed modules.

RS-232 Interface

1. Terminate the GPIB interface software on the computer.

2. Disconnect the GPIB cable from the 1255A and the computer.

3. Using the RS-232 cable, connect the 1255A rear-panel RS-232 connector to the RS-232 connector of the computer. Start the terminal emulation software on the computer.

4. Set the terminal emulation software parameters as follows:

   - 8 bits
   - No parity
   - 1 stop bit
   - Baud rate 19,200

5. Set the DIP switch on the 1255A rear panel as follows:

   - Segment #1: ON
   - Segment #2: OFF
   - Segment #3: ON
   - Segment #4: ON
   - Segment #5: OFF
   - Segment #6: OFF

6. Send the following command to the 1255A:

```
PD 0-1
```

7. Verify that the 1255A returns a message similar to the following:

```
000. MODEL 1255A UNIVERSAL SWITCH CONTROLLER
000. OS REV 26.1 1255A
001. 1260-40A 4X24 SIGNAL MATRIX MODULE 001.
002. 1260-40A 4X24 SIGNAL MATRIX MODULE
002.
003. 1260-40A 4X24 SIGNAL MATRIX MODULE
003.
004. 1260-40A 4X24 SIGNAL MATRIX MODULE
004.
004.END
```

8. Verify that the addresses and model numbers given correspond with the actual model numbers of the installed modules.

External Sync

1. Connect the channel 1 input of the oscilloscope to pin 2 of the SYNC/TRIG connector on the 1255A rear panel. Connect the ground lead of the channel 1 probe to pin 1 of the SYNC/TRIG connector.

2. Set the oscilloscope for normal triggering, on the positive-going edge, from channel 1, with a trigger level of 2.4 VDC.

3. Send the following commands to the 1255A:

```
SYNC ON
DLY 10
CL 1.2
```

4. Verify that the oscilloscope was triggered.

5. Disconnect the oscilloscope from the SYNC/TRIG connector.

External Trigger

1. Set the pulse generator to output a single pulse having the following characteristics:

   - Output level: TTL (from 0 to 5 VDC)
   - Pulse width: 1 uS
   - Pulse direction: Positive-going

2. Connect the pulse generator output to pin 3 of the SYNC/TRIG connector on the 1255A rear panel. Connect the pulse generator ground to pin 1 of the SYNC/TRIG connector.

3. Send an *SLIST* command to the 1255A, defining a scan list of three relays for the installed switch modules. Then send a `SCAN ON` command. For example, if the switch module installed in slot 1 (which is set to address 1) is a 1260-13, the following commands would be appropriate:

```
SLIST 1.1,2,3
SCAN ON
```

4. Set the DMM for the 200 ohm range. Verify that the resistance across the first channel in the scan list is greater than 200 ohms.

5. Send a pulse from the pulse generator. Verify that the resistance across the first channel in the scan list is less than 1 ohm.

6. Send another pulse from the pulse generator. Verify that the resistance across the first channel in the scan list is greater than 200 ohms, and that the resistance across the second channel in the scan list is less than 1 ohm.

7. Send another pulse from the pulse generator. Verify that the resistance across the second channel in the scan list is greater than 200 ohms, and that the resistance across the third channel in the scan list is less than 1 ohm.

8. Disconnect the pulse generator from the 1255A SYNC/TRIG connector.

Test Completion

1. Set the front-panel power switch to the down (OFF) position. Set the rear-panel power switch to the "0" (OFF) position.

2. Disconnect AC power from the 1255A.

Drawings

The following pages contain the major subassembly schematics for the 1255A:

- CPU Schematic (P/N 435097)
- Backplane Schematic (P/N 435098)

407608	Chassis Assy, 1255A	6-13
405098	PCB Assy, Backplane	6-16
435098	Schematic, Backplane	6-17
405097	PCB Assy, CPU	6-20
435097	Schematic, CPU	6-21
407603	Power Supply Assy, 1255A	6-29
405119	PCB Assy, 20 Pin Conn Bd, 1255A	6-33
435119	Schematic, 20 Pin Conn Bd, 1255A	6-34

NOTES:

1. ASSEMBLY AND MANUFACTURING PRACTICES:
   A. FOR WIRE AND CABLE ROUTING, ANY CHOSEN PATH WHICH IS NON-INJURIOUS TO THE CONDUCTORS, CONNECTORS OR ADJACENT ASSEMBLIES IS ACCEPTABLE.
   B. CABLE CLAMP, TIE WRAP AND DOUBLE SIDED TAPE TO BE POSITIONED TO OPTIMIZE AND FACILITATE WIRE AND CABLE RETENTION AND ROUTING.
   C. EXPOSED WIRE AND CABLE CONNECTIONS TO BE PROPERLY SEALED USING APPROPRIATELY-SIZED SHRINK TUBING.
   D. ACTUAL WIRE LENGTH TO BE DETERMINED, CUT, AND TERMINATED AT FINAL INSTALLATION.

△2 PRINT BAR CODE IDENTIFICATION LABEL (INCLUDING CE MARK) WITH PERTINENT DATA USING BRADYCODE BAR CODE SOFTWARE AND AFFIX APPROXIMATELY WHERE SHOWN. FILE NAME "1255A". SOFTWARE P/N 800522.

△3 INSTALL BAFFLE (ITEM 21) ONTO FRONT PANEL (ITEM 8) USING RIVETS (ITEM 35) BEFORE APPLYING OVERLAY (ITEM 22).

△4 INSTALL NYLON WASHER (ITEM 27) BOTH SIDES OF BACKPLANE (ITEM 2).

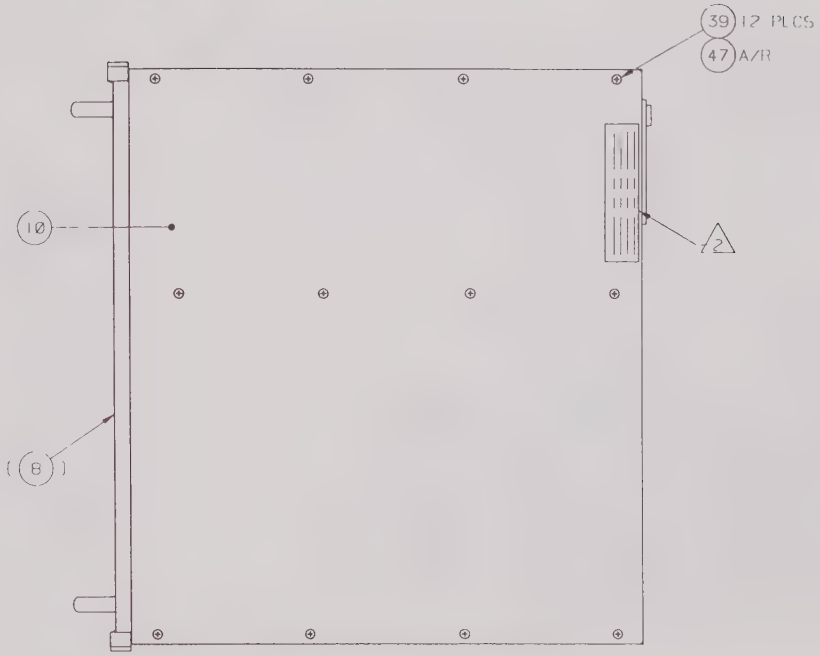

TOP VIEW

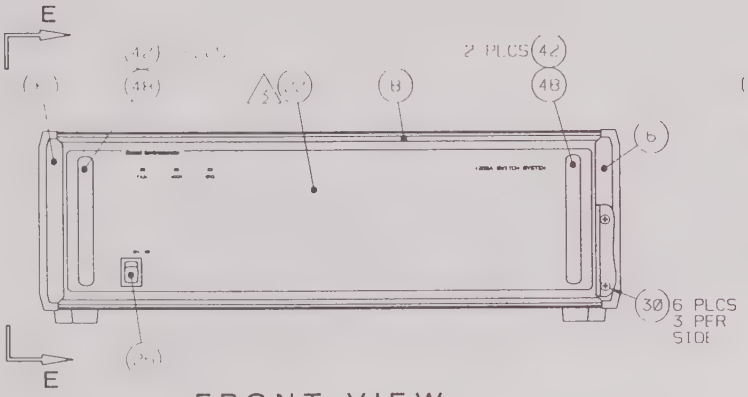

FRONT VIEW

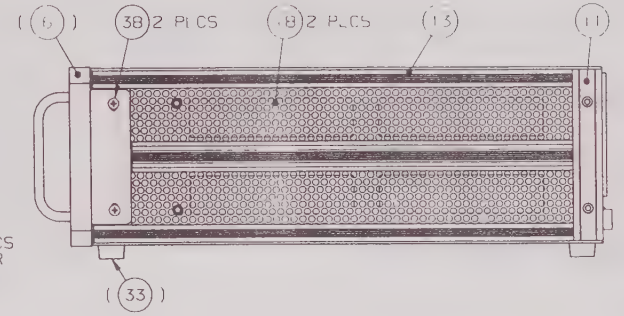

PROPRIETARY NOTICE

THIS DOCUMENT AND THE TECHNICAL DATA HEREIN DISCLOSED ARE PROPRIETARY TO RACAL INSTRUMENTS INC. AND SHALL NOT WITHOUT THE EXPRESS WRITTEN PERMISSION OF RACAL INSTRUMENTS INC BE USED RELEASED OR DISCLOSED IN WHOLE OR IN PART OR USED TO SOLICIT QUOTATIONS FROM A COMPETITIVE SOURCE OR USED FOR MANUFACTURE BY ANYONE OTHER THAN RACAL INSTRUMENTS INC. THE INFORMATION HEREON HAS BEEN DEVELOPED AT PRIVATE EXPENSE, AND MAY ONLY BE USED FOR PURPOSES OF ENGINEERING EVALUATION AND FOR INCORPORATION INTO TECHNICAL SPECIFICATIONS AND OTHER DOCUMENTS WHICH SPECIFY PROCUREMENT OF PRODUCTS FROM RACAL INSTRUMENTS INC.

RACAL Instruments, Inc.			
4 Goodyear St., Irvine, CA. 92718-2002			
TITLE: CHASSIS ASSY, 1255A			
SIZE: D	CAGE CODE: 21793	DWG NO.: 407608	REV.: A
SCALE: 1/2	CALC WT	ACT WT	SHEET 1 OF 5

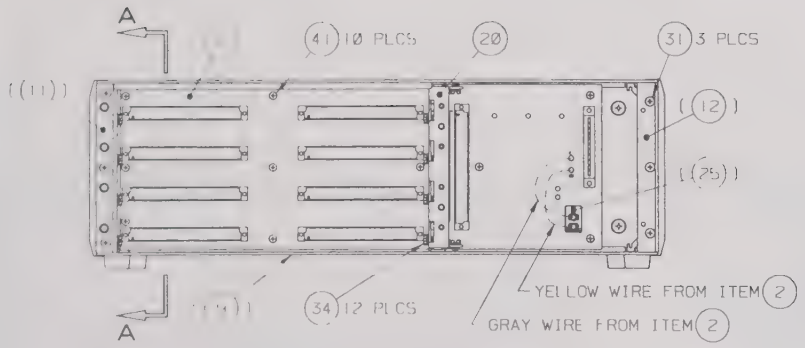

REAR VIEW
(POWER SUPPLY AND CPU ASSYS REMOVED FOR CLARITY)

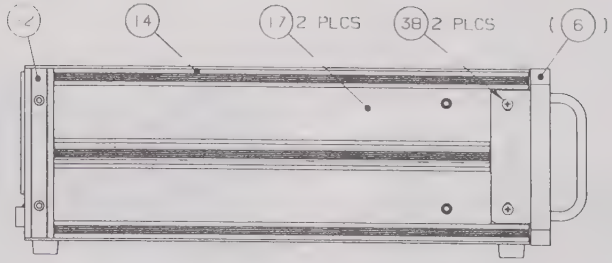

VIEW E-E

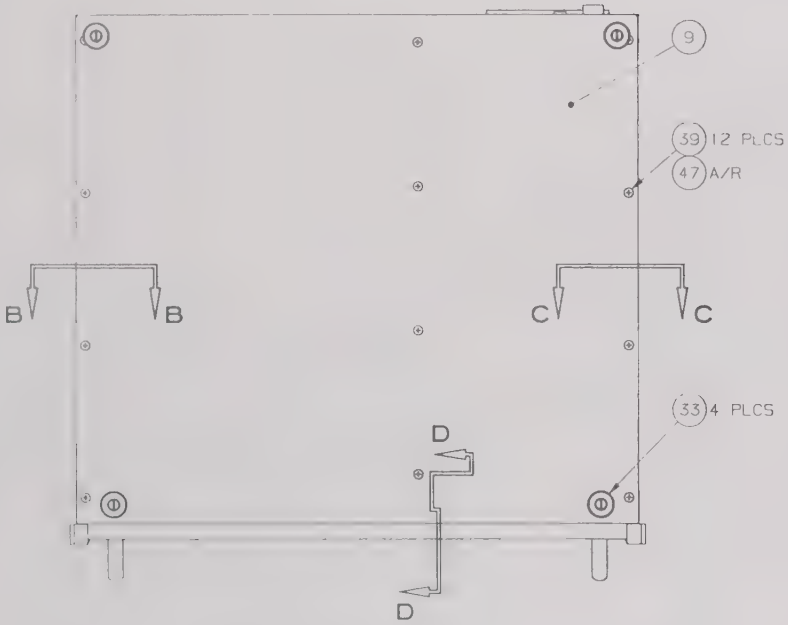

BOTTOM VIEW

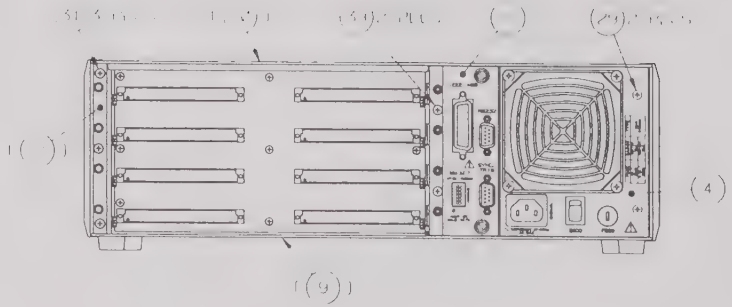

REAR VIEW

SIZE	CAGE CODE	DWG NO.	REV
D	21793	407608	A

SCALE 1/2 | CALC WT | ACT WT | SHEET 2 OF 3

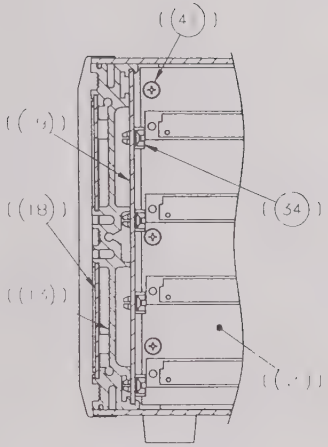

SECTION B-B
(FULL SCALE)

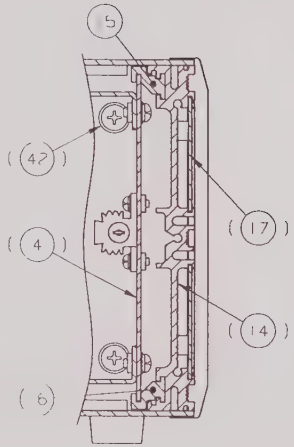

SECTION C-C
(FULL SCALE)

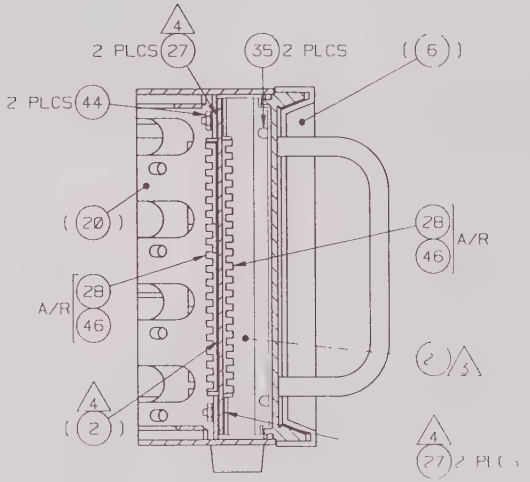

SECTION D-D
(ROTATED 90° CCW)
(FULL SCALE)

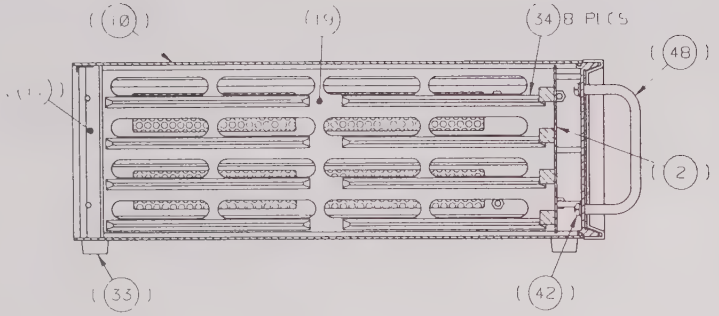

SECTION A-A

SIZE	CAGE CODE	DWG NO.	REV.
D	21793	407608	A
SCALE 1/2		CALC VT / KEY VT	SHEET 3 OF 3

NOTES:

1. REFERENCE SCHEMATIC 435098.
2. SLEEVING ONE SIDE ONLY. (ANODE LEAD).
3. COMPONENTS C1, C2, CR4, Q1 AND U1 ARE NOT INSTALLED.
4. INSERT CABLE TIE (ITEM 19) THRU HOLE FROM CIRCUIT SIDE, THEN BACK THRU HOLE AGAIN.

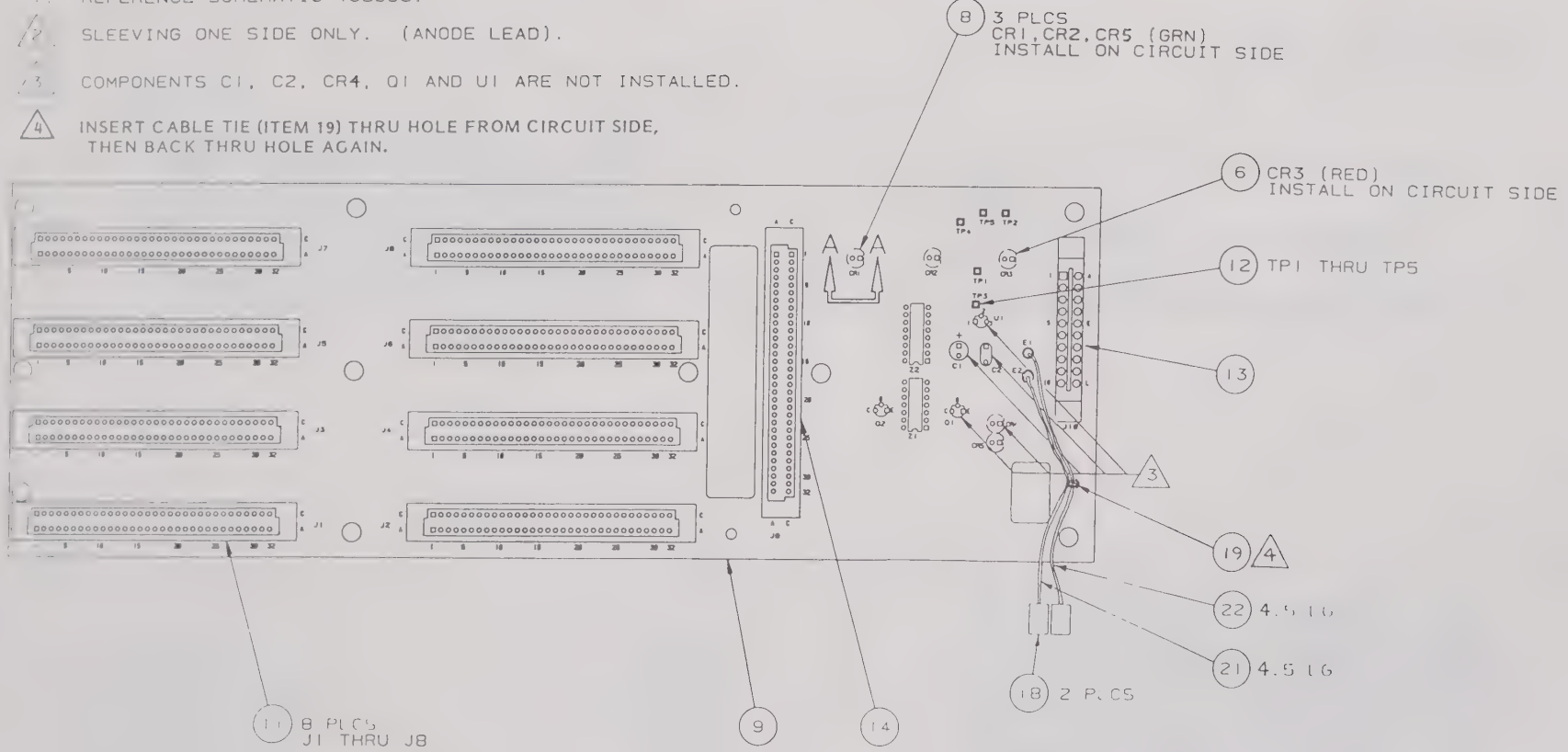

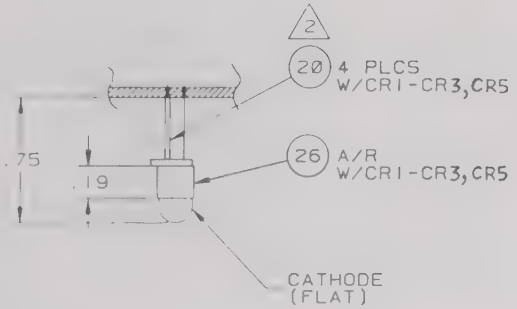

SECTION A-A
SCALE 2/1

PROPRIETARY NOTICE

THIS DOCUMENT AND THE TECHNICAL DATA HEREIN DISCLOSED ARE PROPRIETARY TO RACAL INSTRUMENTS INC. AND SHALL NOT, WITHOUT THE EXPRESS WRITTEN PERMISSION OF RACAL INSTRUMENTS INC. BE USED, RELEASED OR DISCLOSED IN WHOLE OR IN PART, OR USED TO SOLICIT QUOTATIONS FROM A COMPETITIVE SOURCE OR USED FOR MANUFACTURE BY ANYONE OTHER THAN RACAL INSTRUMENTS INC. THE INFORMATION HEREON HAS BEEN DEVELOPED AT PRIVATE EXPENSE, AND MAY ONLY BE USED FOR PURPOSES OF ENGINEERING EVALUATION AND FOR INCORPORATION INTO TECHNICAL SPECIFICATIONS AND OTHER DOCUMENTS WHICH SPECIFY PROCUREMENT OF PRODUCTS FROM RACAL INSTRUMENTS INC.

RACAL Instruments, Inc.
4 Goodyear St., Irvine, CA. 92718-2002

TITLE
PCB ASSY, BACKPLANE

SIZE	CAGE CODE	DWG NO.	REV.
D	21793	405098	C

SCALE NONE | CALC. VT | ACT. VT | SHEET 1 OF 2

UNUSED SEGMENTS

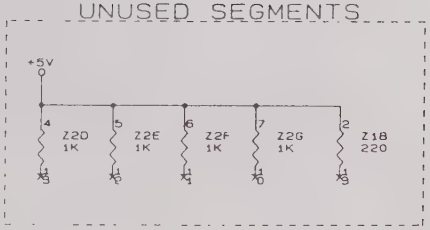

Z2
Z1
U1
TP5
Q2
J10
E2
CR5
C2
HIGHEST REF.DES.

NOTES:

1. CAPACITOR VALUES ARE IN MICROFARADS UNLESS OTHERWISE SPECIFIED.
2. RESISTOR NETWORKS ARE IN OHMS, +/-2% UNLESS OTHERWISE SPECIFIED.
3. COMPONENTS ARE NOT INSTALLED

PROPRIETARY NOTICE

THIS DOCUMENT AND THE TECHNICAL DATA HEREIN DISCLOSED ARE PROPRIETARY TO RACAL INSTRUMENTS INC. AND SHALL NOT, WITHOUT THE EXPRESS WRITTEN PERMISSION OF RACAL INSTRUMENTS INC. BE USED, RELEASED OR DISCLOSED IN WHOLE OR IN PART, OR USED TO SOLICIT QUOTATIONS FROM A COMPETITIVE SOURCE OR USED FOR MANUFACTURE BY ANYONE OTHER THAN RACAL INSTRUMENTS INC. THE INFORMATION HEREON HAS BEEN DEVELOPED AT PRIVATE EXPENSE, AND MAY ONLY BE USED FOR PURPOSES OF ENGINEERING EVALUATION AND FOR INCORPORATION INTO TECHNICAL SPECIFICATIONS AND OTHER DOCUMENTS WHICH SPECIFY PROCUREMENT OF PRODUCTS FROM RACAL INSTRUMENTS INC.

RACAL Instruments, Inc.
4 Goodyear St., Irvine, CA. 92718-2002

TITLE
SCHEM., BACKPLANE

SIZE	CAGE CODE	DWG NO.	REV.
B	21793	435098	A

SCALE	CALC.WT	ACT.WT	SHEET 1 OF 3

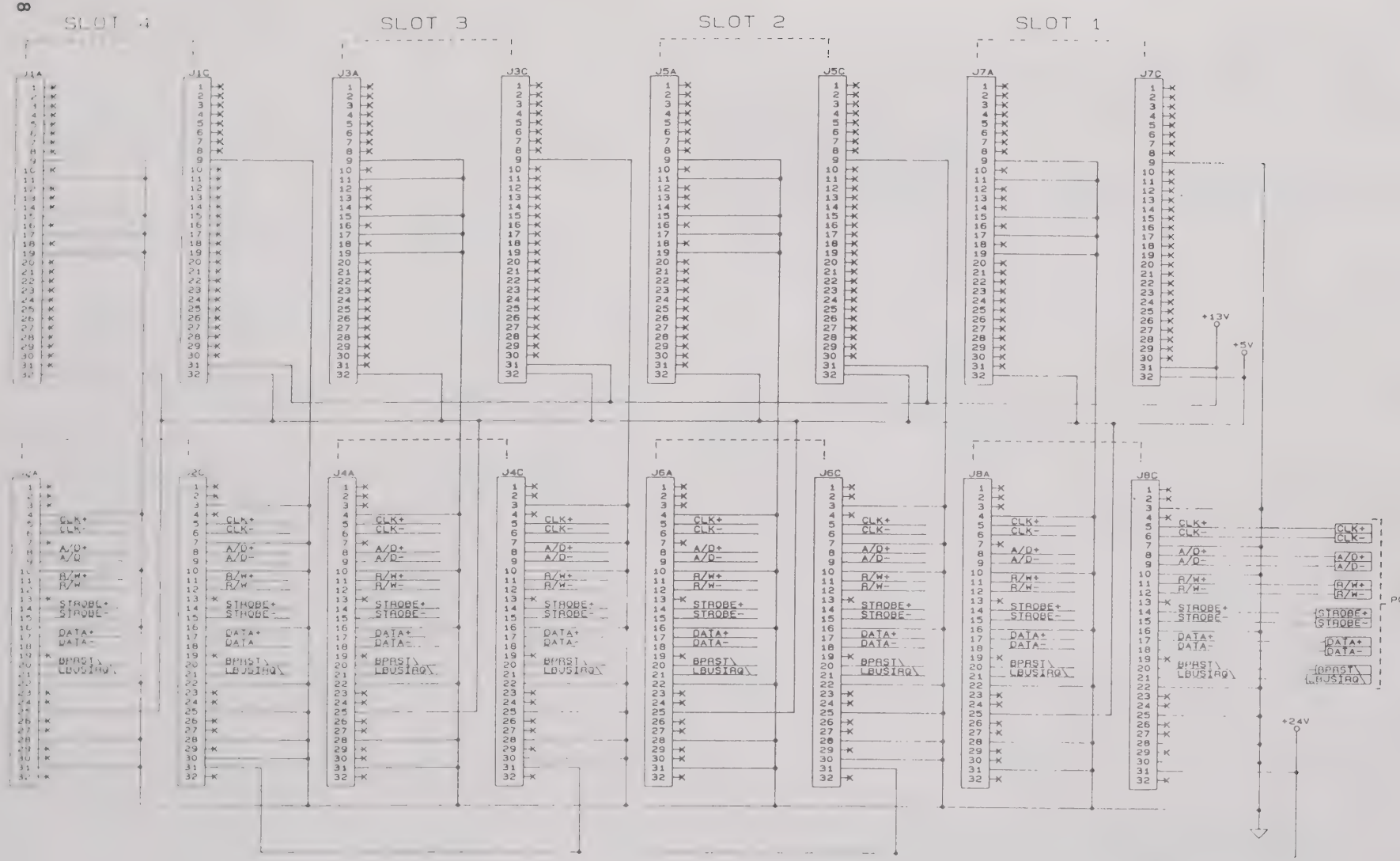

SIZE	CAGE CODE	DWG NO.	REV.
B	21793	435098	A
SCALE -----		CALC. WT / ACT. WT	SHEET 2 3

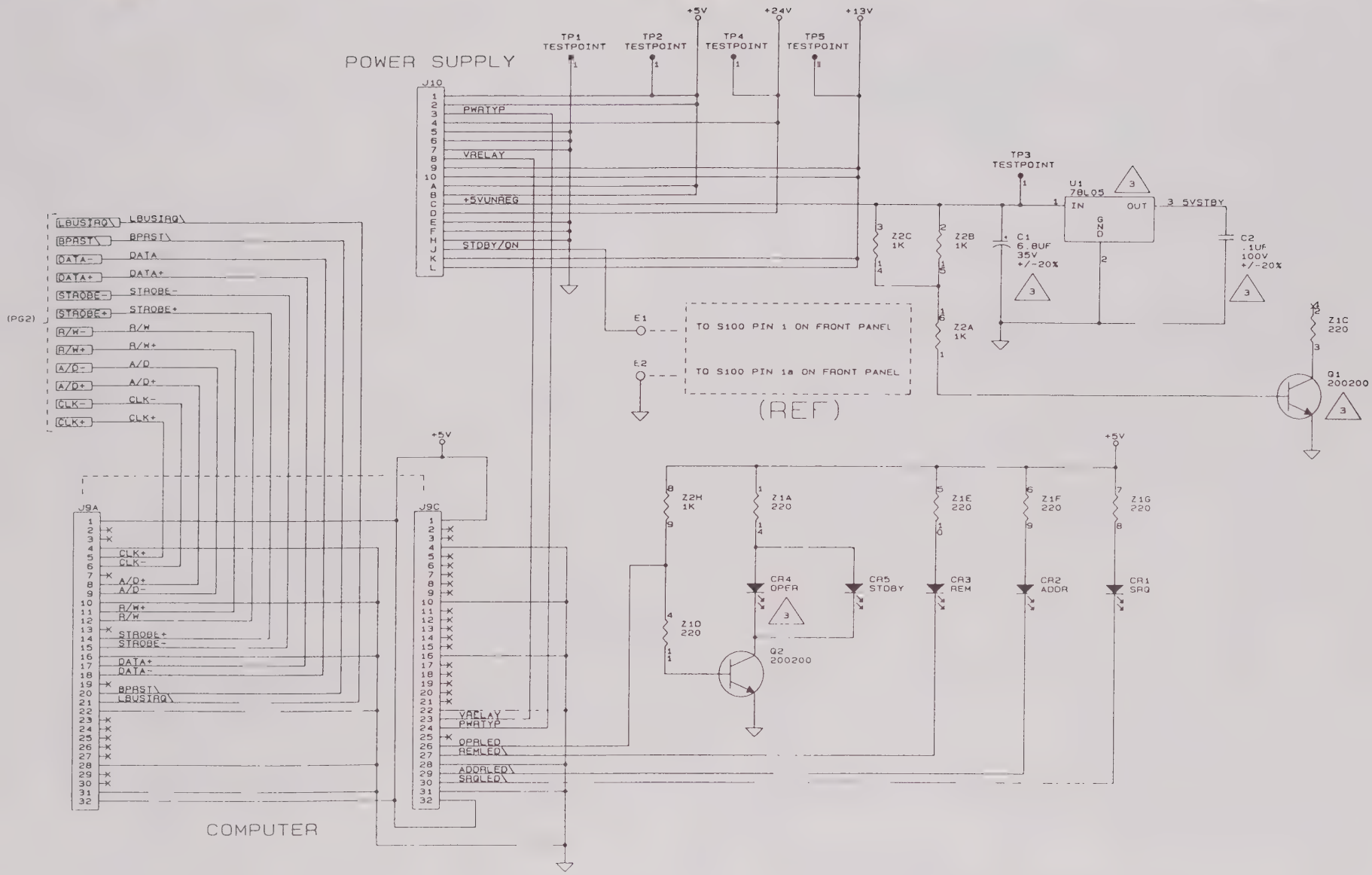

SIZE	CAGE CODE	DWG NO.	REV.
B	21793	435098	A
SCALE -----		CALC. VT / ACT. VT	SHEET 3 3

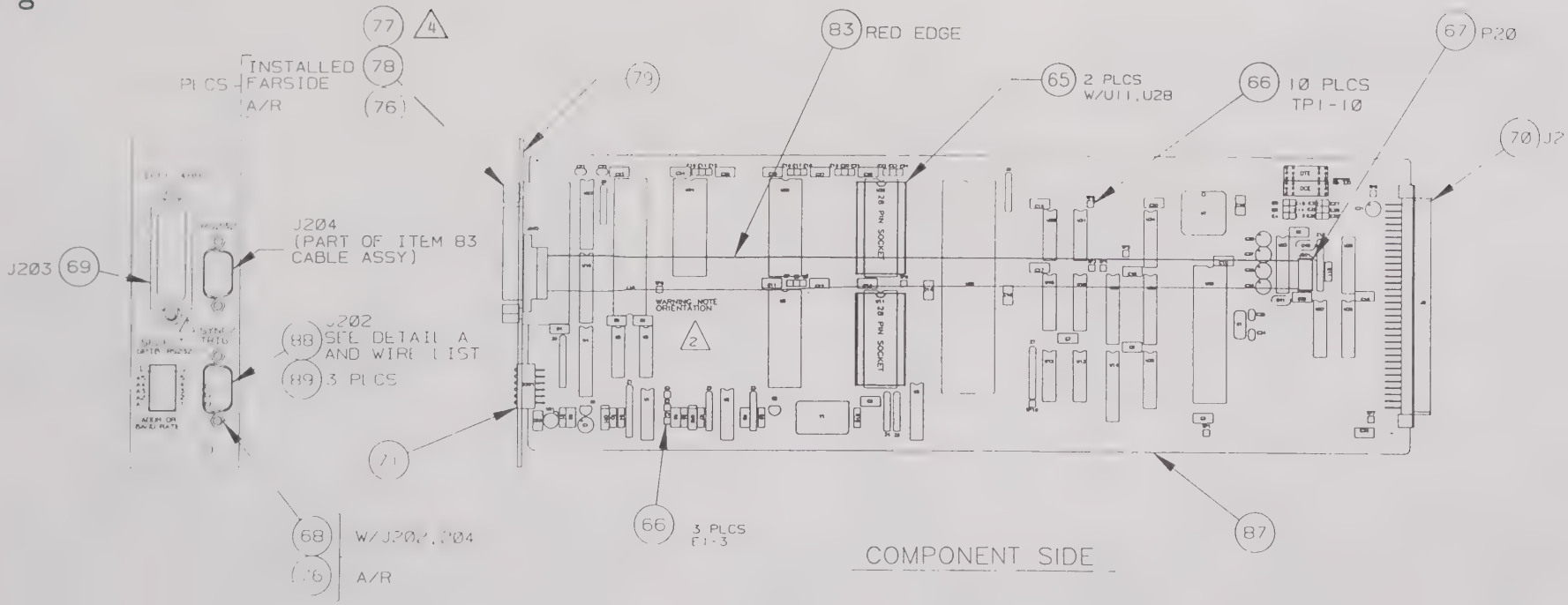

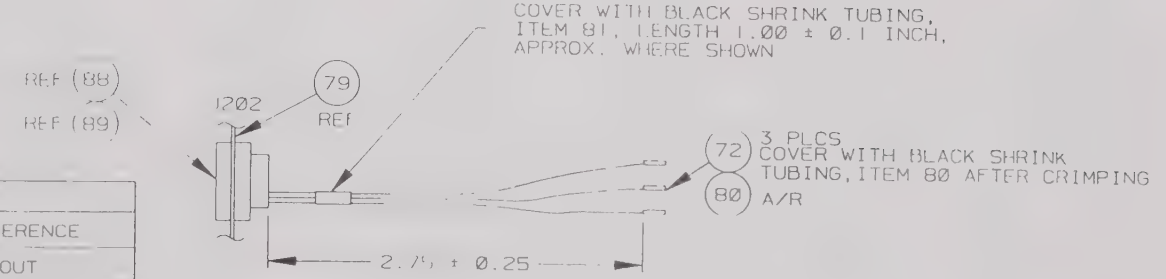

WIRE LIST					
FROM	TO	TYPE	P/N	COLOR	REFERENCE
E1	J202-1	24 AWG	524999	WHT	SYNOUT
E2	J202-2	24 AWG	524555	GRN	GND
E3	J202-3	24 AWG	524666	BLU	TRIGX

NOTES:

1. REFERENCE SCHEMATIC 435097.
2. INK STAMP SERIAL NUMBER AND CURRENT REVISION ON COMPONENT SIDE APPROX. WHERE SHOWN.
3. U10 & U27 ARE NOT INSTALLED
4. DISCARD NUTS (2) AND LOCKWASHERS (2) SUPPLIED WITH ITEM 77.

PROPRIETARY NOTICE
THIS DOCUMENT AND THE TECHNICAL DATA HEREIN DISCLOSED ARE PROPRIETARY TO RACAL INSTRUMENTS INC. AND SHALL NOT, WITHOUT THE EXPRESS WRITTEN PERMISSION OF RACAL INSTRUMENTS INC BE USED RELEASED OR DISCLOSED IN WHOLE OR IN PART OR USED TO SOLICIT QUOTATIONS FROM A COMPETITIVE SOURCE OR USED FOR MANUFACTURE BY ANYONE OTHER THAN RACAL INSTRUMENTS INC. THE INFORMATION HEREON HAS BEEN DEVELOPED AT PRIVATE EXPENSE AND MAY ONLY BE USED FOR PURPOSES OF ENGINEERING EVALUATION AND FOR INCORPORATION INTO TECHNICAL SPECIFICATIONS AND OTHER DOCUMENTS WHICH SPECIFY PROCUREMENT OF PRODUCTS FROM RACAL INSTRUMENTS INC.

RACAL Instruments, Inc.
4 Goodyear St., Irvine, CA. 92718-2002

TITLE: PCB ASSY, CPU

SIZE	CAGE CODE	DWG NO.	REV.
D	21793	405097	D

SCALE NONE | CALC. VT | ACT. VT | SHEET 1 OF 3

UNUSED PARTS

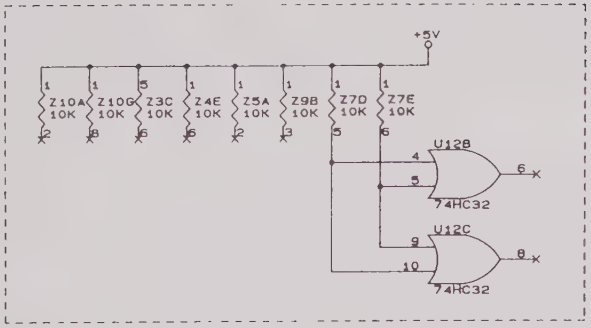

POWER CONNECTIONS:

REFERENCE DESIGNATOR	IC TYPE	+5V PIN NUMBER	GND PIN NUMBER
U1, 2	339	3	12
U3	74LS148	16	8
U4, 20	74LS244	20	10
U5	74LS73	4	11
U6	74LS14	14	7
U7	7032 (231551-001)	3, 15, 23, 35	10, 22, 30, 42
U9, 26	62256	28	14
U10	27512 (231548-001)	28	14
U11	27512 (231548-002)	28	14
U12	74HC32	14	7
U13	74F00	14	7
U14	74LS374	20	10
U16	75160	20	10
U17	9914A	40	20
U18	74F139	16	8
U19	74F138	16	8
U38, U39	26LS31	16	8
U23	75161	20	10
U24	28C64	28	14
U27	27512 (231548-003)	28	14
U28	27512 (231548-004)	28	14
U29	68000	14, 49	18, 53
U30	74LS32	14	7
U31	74F04	14	7
U32	68681	40	20
U33	MAX232	16	15
U34, U35	74HCT166	16	8
U36	74ACT299	20	10
U37	26LS32	16	8
Y1	OSCILLATOR	14	7

NOTES:

1. MEMORY OPTIONS:

   TO CONFIGURE AS 8K X 16:

   USE 6264 FOR U9 AND U26.

   CUT CIRCUIT TRACE BETWEEN E8 AND E9 (DEFAULT TRACE).

   INSTALL JUMPER FROM E7 TO E8.

   CUT CIRCUIT TRACE BETWEEN E17 AND E18.

   INSTALL JUMPER FROM E16 TO E17.

   MAKE NO CONNECTION TO E9 OR E18.

   TO CONFIGURE AS 32K X 16:

   USE 62256 FOR U9 AND U26.

   IF CIRCUIT TRACE FROM E8 TO E9 HAS BEEN CUT, INSTALL JUMPER FROM E8 TO E9.

   IF CIRCUIT TRACE FROM E17 TO E18 HAS BEEN CUT, INSTALL JUMPER FROM E17 TO E18.

   MAKE NO CONNECTION TO E7 OR E16.

   U9 AND U26 MUST BE OF THE SAME MEMORY CAPACITY.

2. DO NOT INSTALL U10 AND U27. THESE ARE FOR FUTURE EXPANSION.

3. CAPACITOR VALUES ARE IN MICROFARADS, 100V, +/-20% UNLESS OTHERWISE SPECIFIED.

4. RESISTOR VALUES ARE IN OHMS, 1/4W, +/-5% UNLESS OTHERWISE SPECIFIED.

5. RESISTOR NETWORKS ARE IN OHMS, +/-2% UNLESS OTHERWISE SPECIFIED.

HIGHEST REF.DES.
Z10
Y1
X1
VR1
U39
TP10
S201
R11
Q2
J203
E24
CR2
C41

PROPRIETARY NOTICE

THIS DOCUMENT AND THE TECHNICAL DATA HEREIN DISCLOSED ARE PROPRIETARY TO RACAL INSTRUMENTS INC. AND SHALL NOT, WITHOUT THE EXPRESS WRITTEN PERMISSION OF RACAL INSTRUMENTS INC. BE USED, RELEASED OR DISCLOSED IN WHOLE OR IN PART, OR USED TO SOLICIT QUOTATIONS FROM A COMPETITIVE SOURCE OR USED FOR MANUFACTURE BY ANYONE, OTHER THAN RACAL INSTRUMENTS INC. THE INFORMATION HEREON HAS BEEN DEVELOPED AT PRIVATE EXPENSE, AND MAY ONLY BE USED FOR PURPOSES OF ENGINEERING EVALUATION AND FOR INCORPORATION INTO TECHNICAL SPECIFICATIONS AND OTHER DOCUMENTS WHICH SPECIFY PROCUREMENT OF PRODUCTS FROM RACAL INSTRUMENTS INC.

RACAL Instruments, Inc.
4 Goodyear St., Irvine, CA. 92718-2002

TITLE
SCHEM., CPU

SIZE	CAGE CODE	DWG NO.	REV.
B	21793	435097	B

SCALE ----- | CALC.VT | ACT.VT | SHEET 1 OF 8

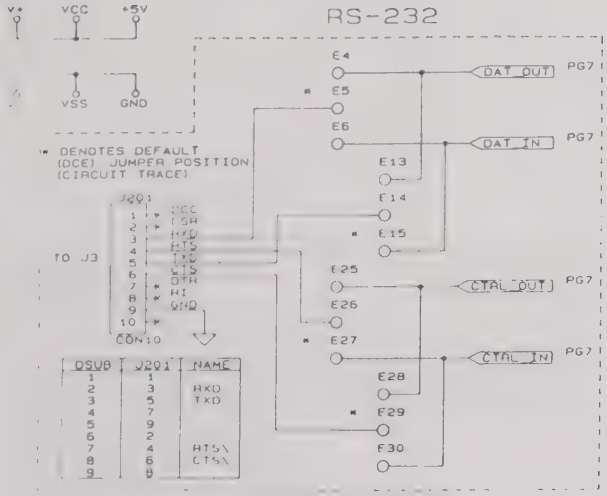

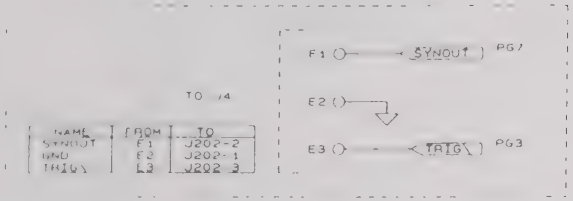

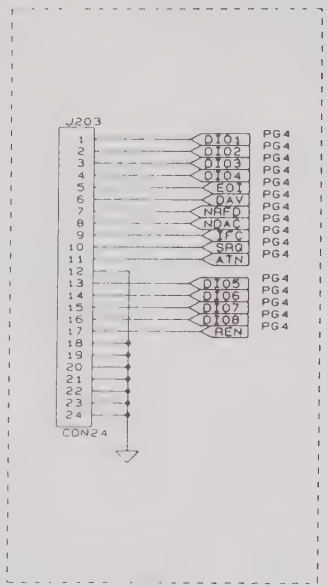

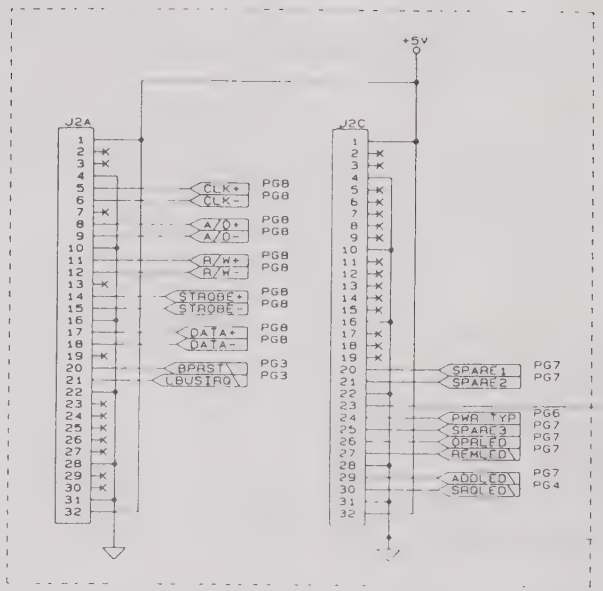

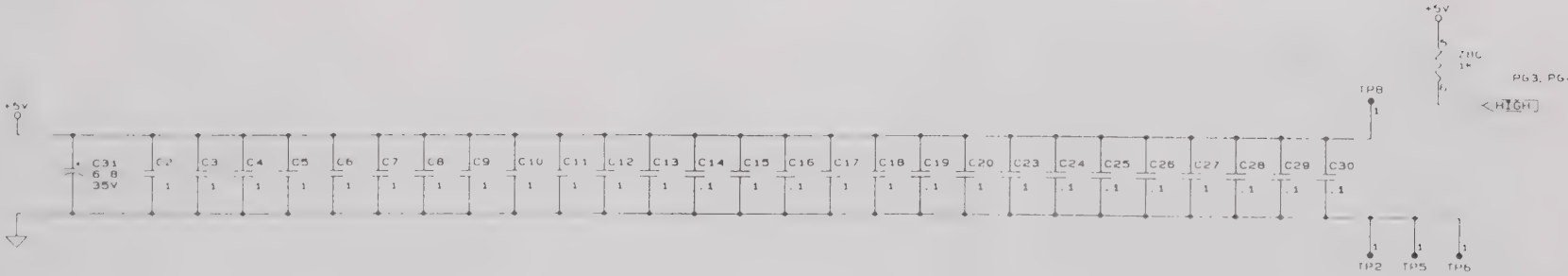

SIZE	CAGE CODE	DWG NO	REV
B	21793	435097	B
SCALE -		CALC. VT / ACT VT	SHEET 2 8

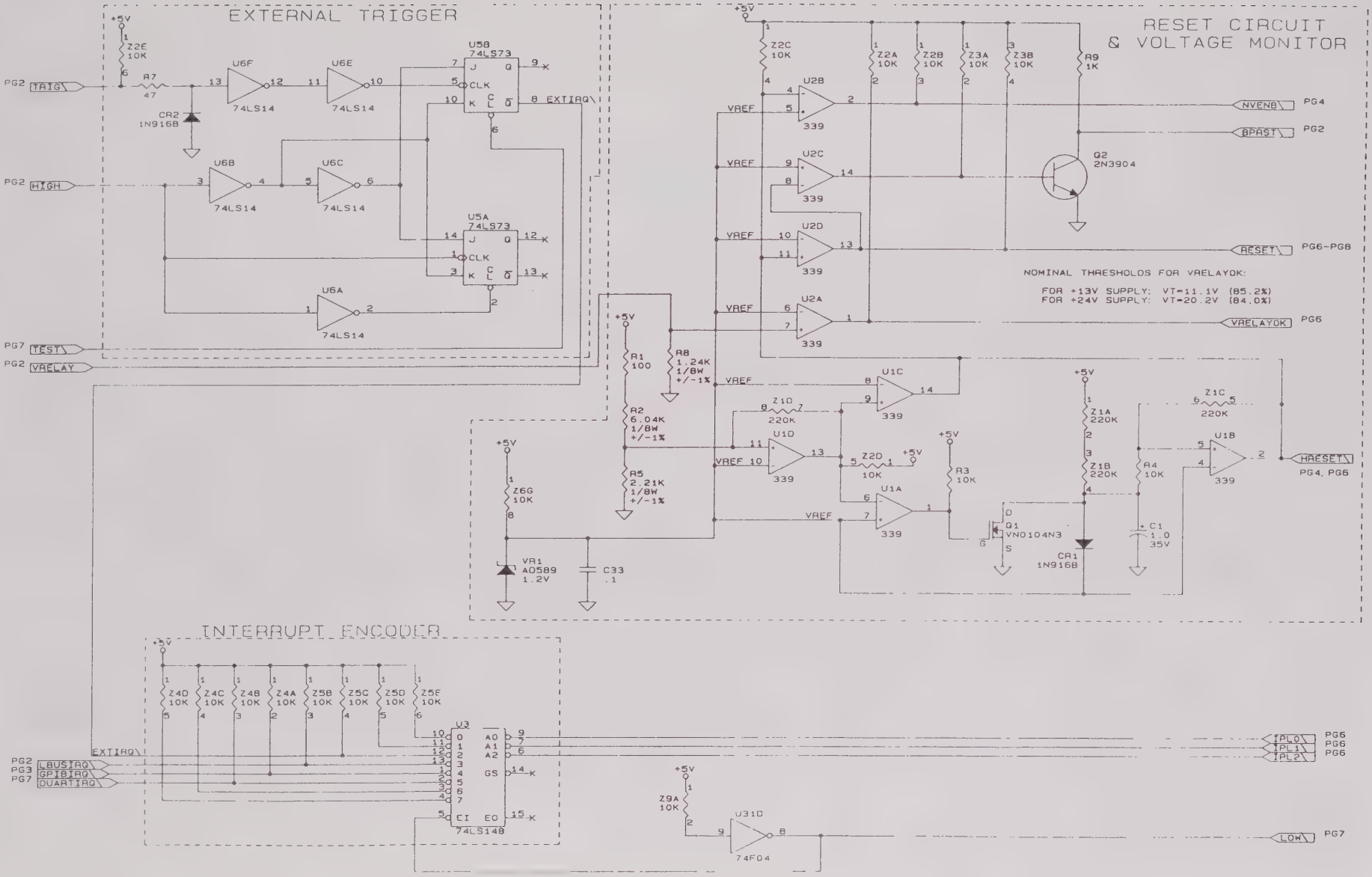

SIZE	CAGE CODE	DWG NO.	REV.
B	21793	435097	B
SCALE -----		CALC VT / ACT. VT	SHEET 3 B

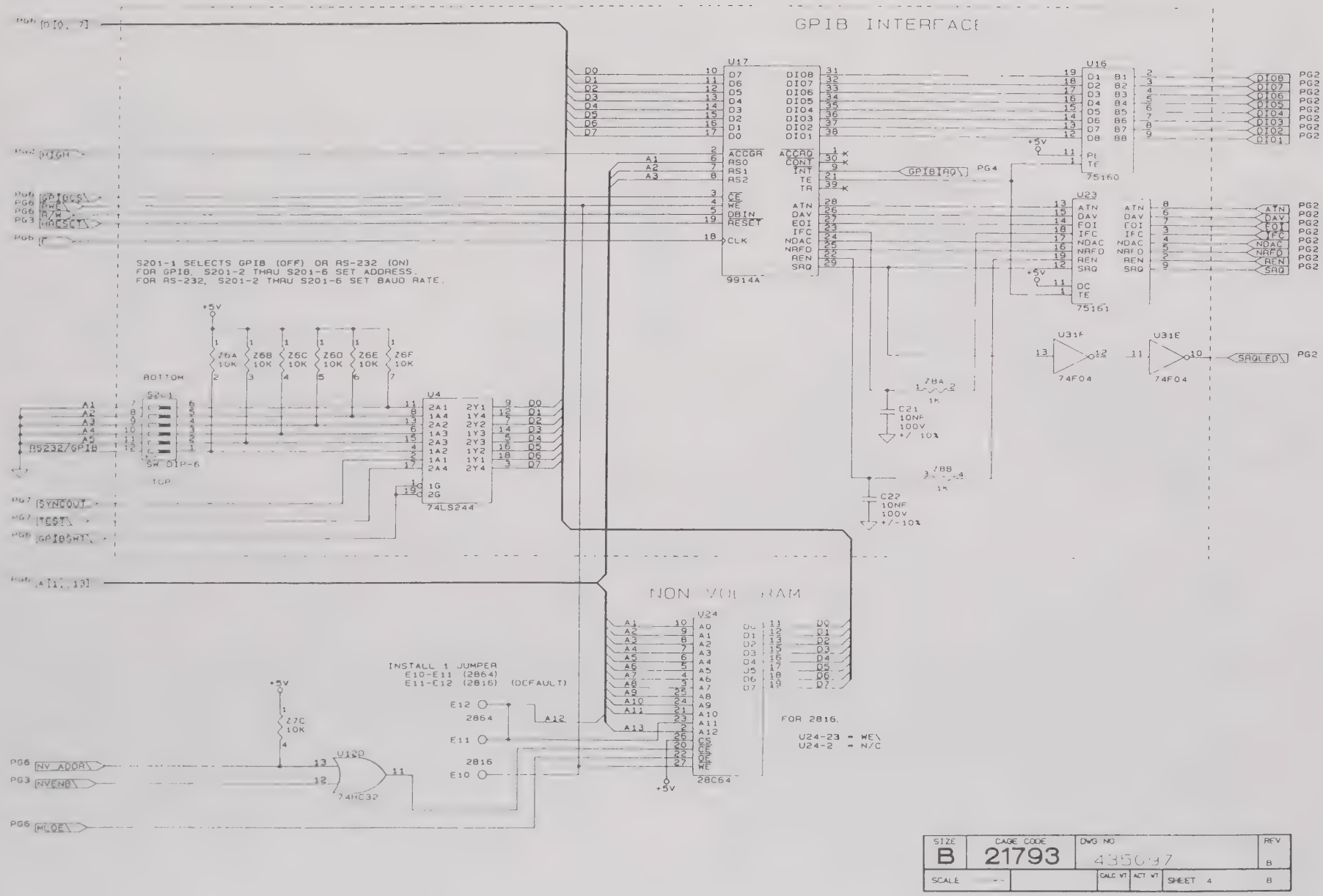
GPIB INTERFACE
S201-1 SELECTS GPIB (OFF) OR RS-232 (ON)
FOR GPIB. S201-2 THRU S201-6 SET ADDRESS.
FOR RS-232, S201-2 THRU S201-6 SET BAUD RATE.
BOTTOM
TOP
SW DIP-6
74LS244
9914A
75160
75161
74F04
NON VOLATILE RAM
INSTALL 1 JUMPER
E10-E11 (2864)
E11-E12 (2816) (DEFAULT)
2864
2816
74HC32
28C64
FOR 2816.
U24-23 = WE\
U24-2 = N/C
SIZE B
CAGE CODE 21793
DWG NO 4350137
REV B
SCALE
SHEET 4 8

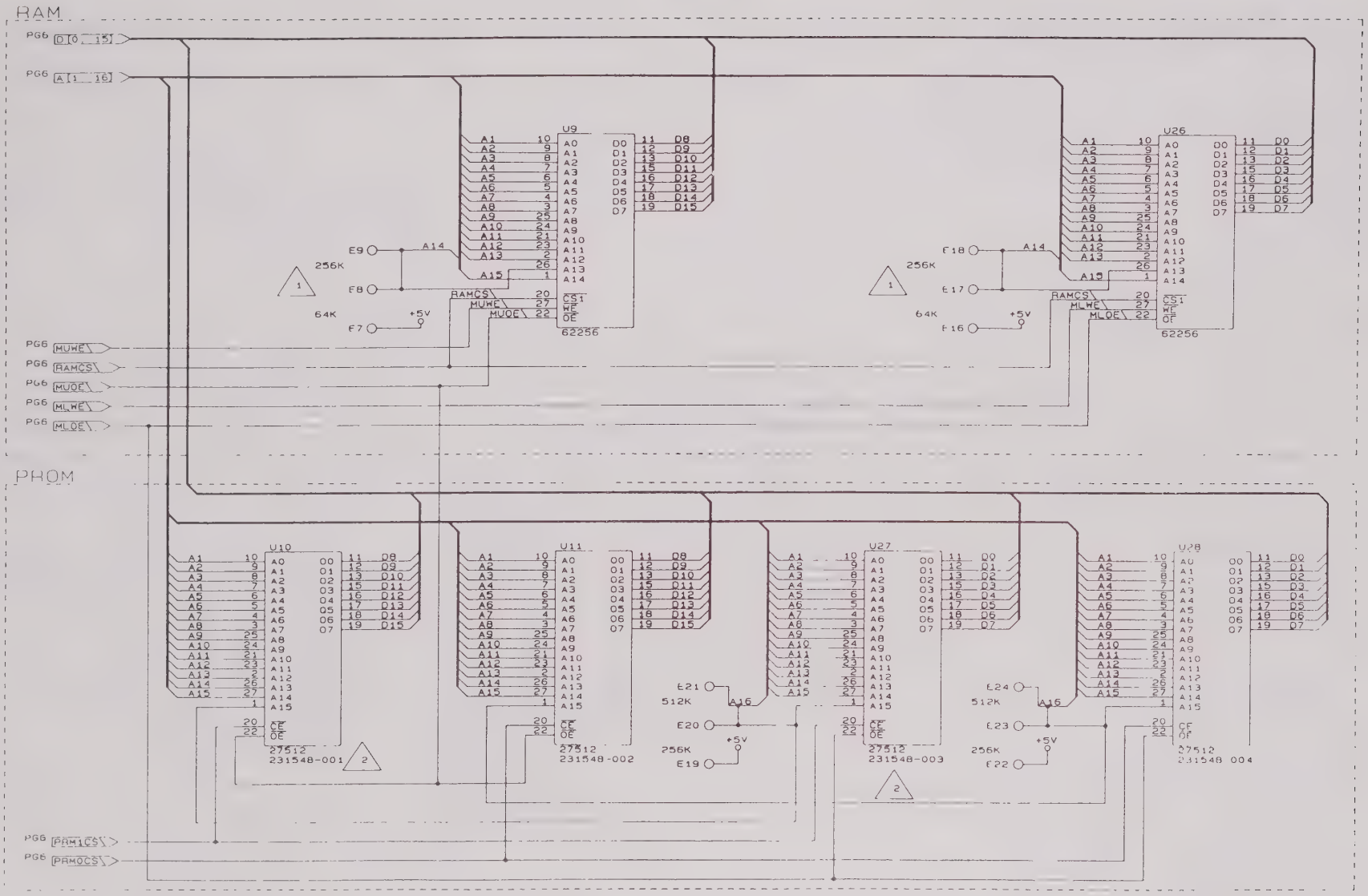

SIZE	CAGE CODE	DWG NO.	REV.
B	21793	435091	B
SCALE ----		CALC. WT / ACT WT	SHEET 5 B

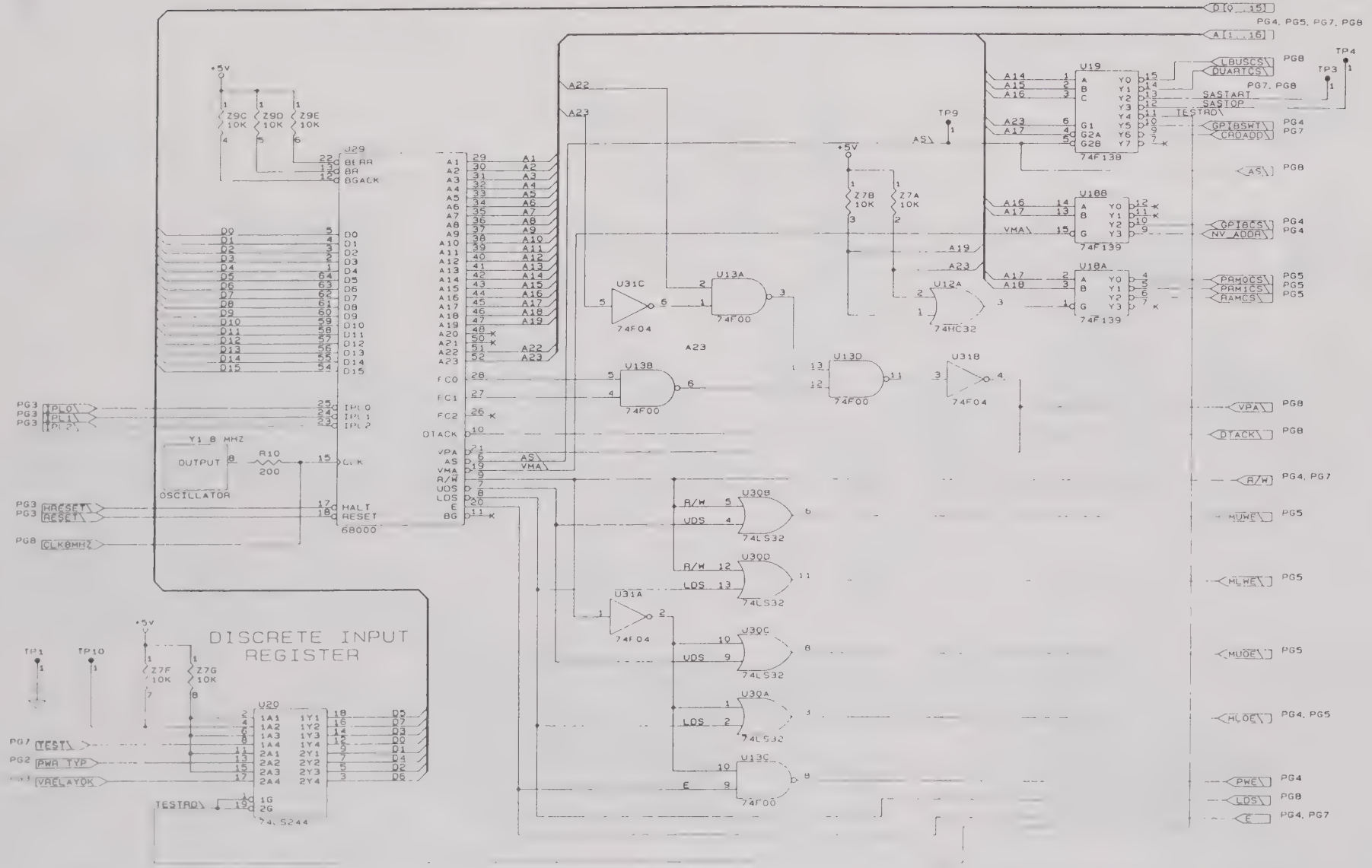

SIZE	CAGE CODE	DWG NO	REV.
B	21793	435097	B
SCALE		CALC WT / ACT WT	SHEET 6 B

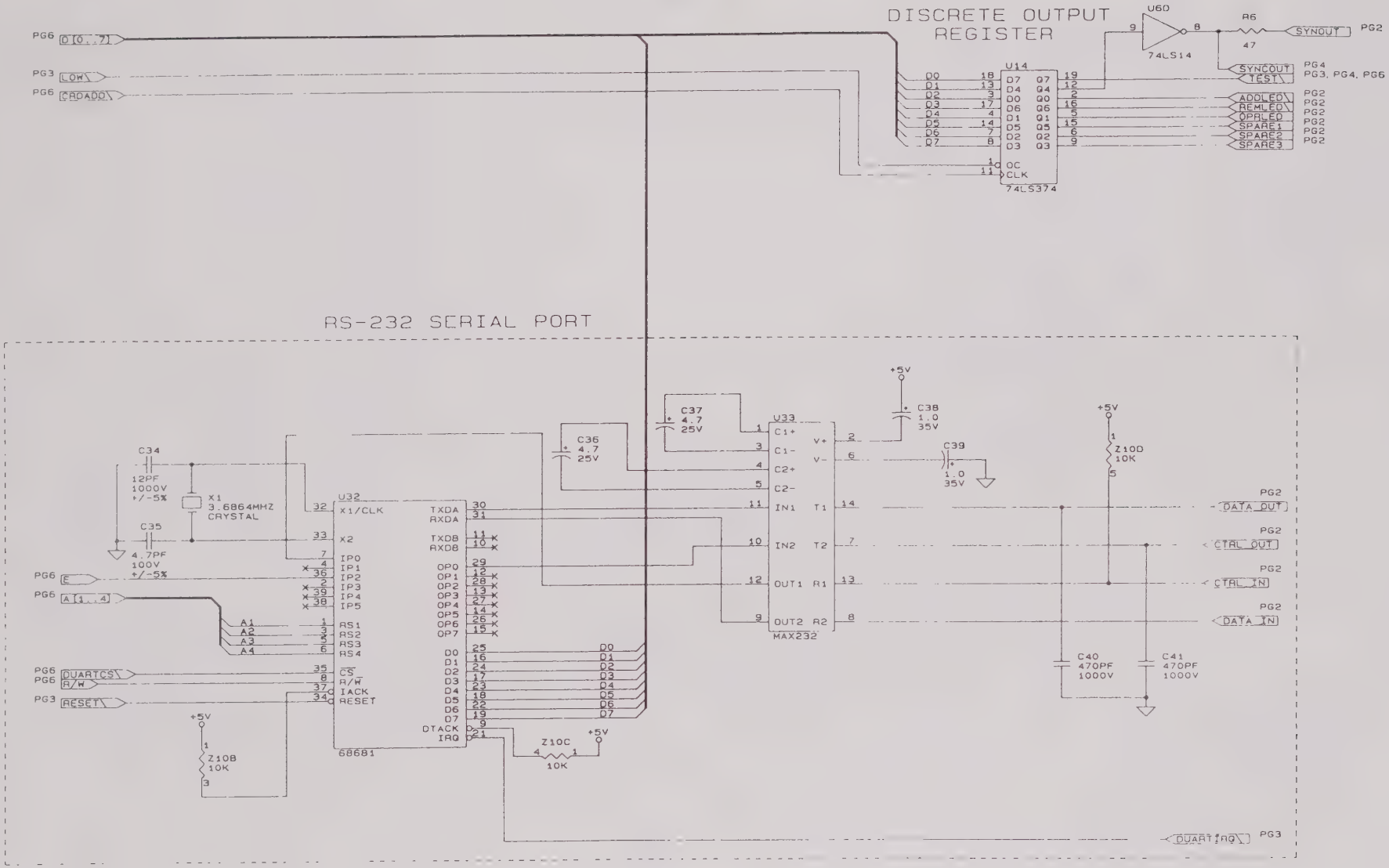

SIZE	CAGE CODE	DWG NO	REV.
B	21793	435047	B
SCALE		CALC WT / ACT WT	SHEET 7 8

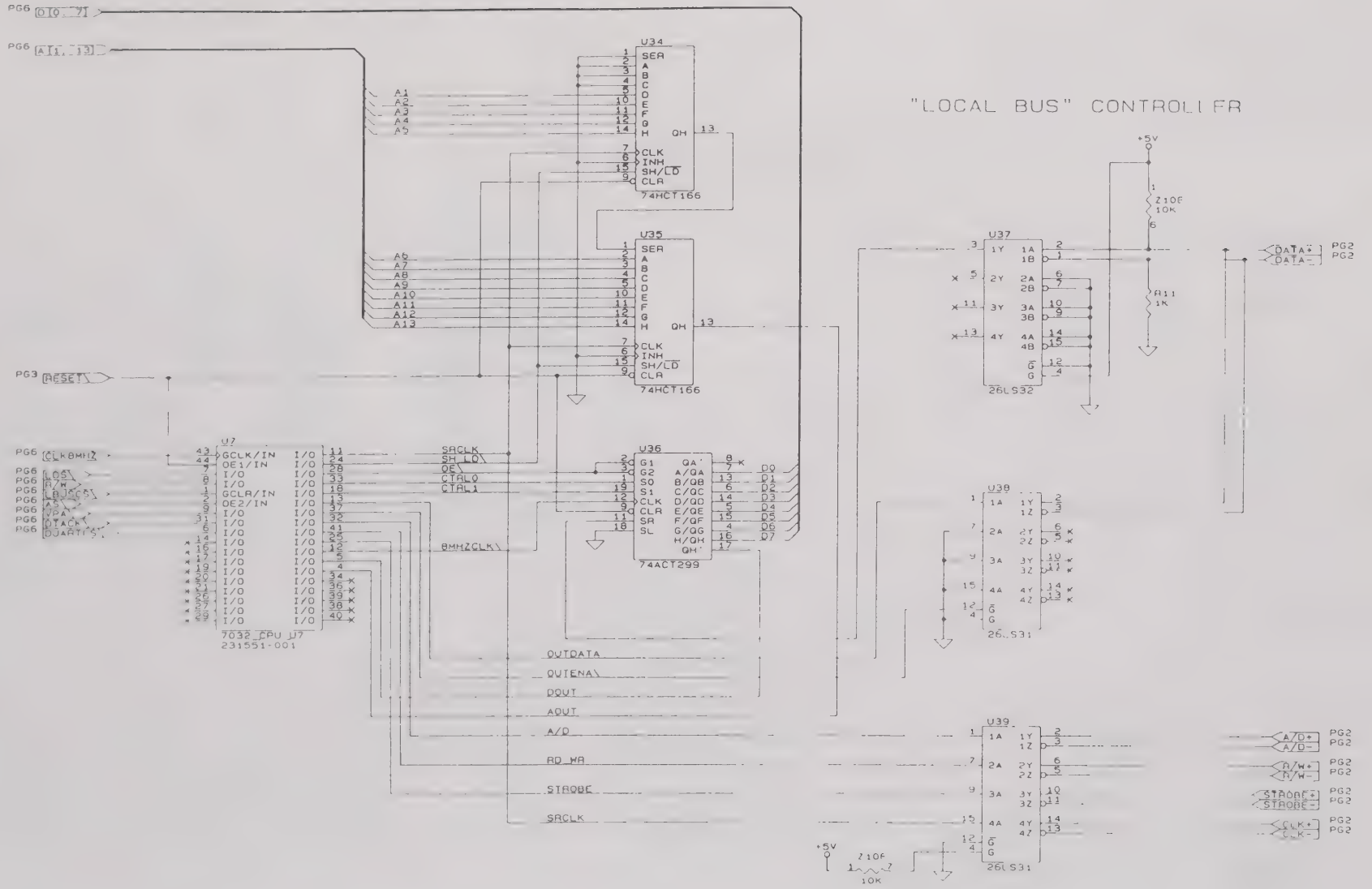

SIZE	CAGE CODE	DWG NO	REV
B	21793	1350?/	B
SCALE -----		CALC VT / ACT VT	SHEET 8 OF 8

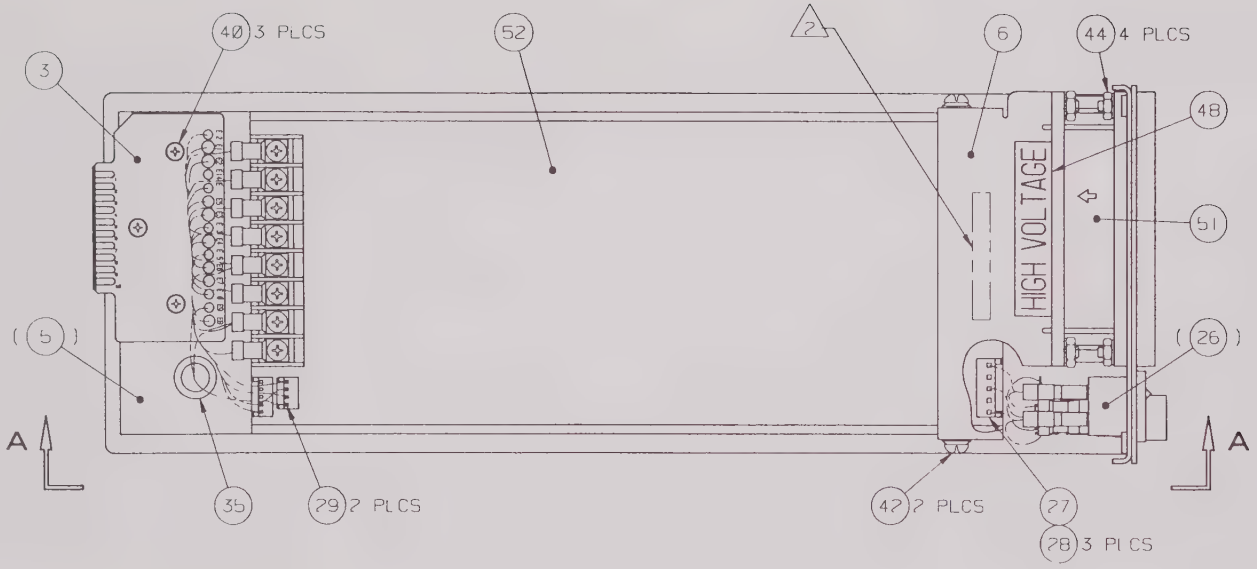

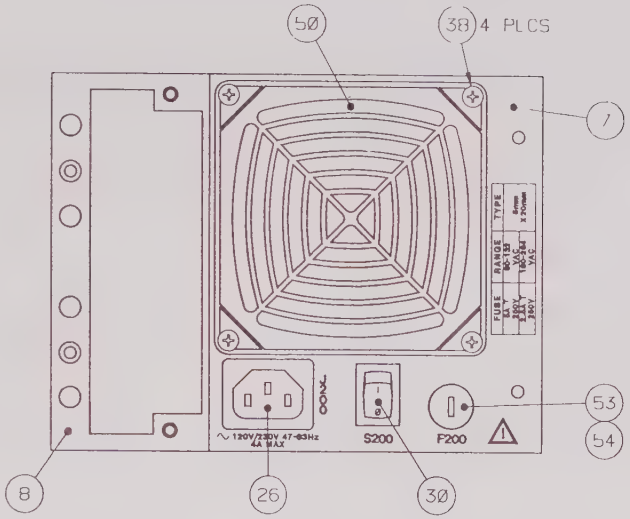

NOTES:

1. ASSEMBLY AND MANUFACTURING PRACTICES:
   A. FOR WIRE AND CABLE ROUTING, ANY CHOSEN PATH WHICH IS NON-INJURIOUS TO THE CONDUCTORS, CONNECTORS OR ADJACENT ASSEMBLIES IS ACCEPTABLE.
   B. CABLE CLAMP, TIE WRAP AND DOUBLE SIDED TAPE TO BE POSITIONED TO OPTIMIZE AND FACILITATE WIRE AND CABLE RETENTION AND ROUTING.
   C. EXPOSED WIRE AND CABLE CONNECTIONS TO BE PROPERLY SEALED USING APPROPRIATELY-SIZED SHRINK TUBING.
   D. ACTUAL WIRE LENGTH TO BE DETERMINED, CUT, AND TERMINATED AT FINAL INSTALLATION.

2. INK STAMP ASSEMBLY NUMBER AND CURRENT REVISION LETTER APPROXIMATELY WHERE SHOWN USING INDELIBLE BLACK INK.

3. DRESS FAN WIRES THRU FAN CUT OUT AS SHOWN IN SECTION B-B.

4. APPLY THERMAL COMPOUND (ITEM 11) TO MOUNTING SURFACE OF RESISTOR (ITEM 1) PRIOR TO SECURING IT TO POWER SUPPLY CHASSIS (ITEM 8).

PROPRIETARY NOTICE

THIS DOCUMENT AND THE TECHNICAL DATA HEREIN DISCLOSED ARE PROPRIETARY TO RACAL INSTRUMENTS INC. AND SHALL NOT, WITHOUT THE EXPRESS WRITTEN PERMISSION OF RACAL INSTRUMENTS INC. BE USED, RELEASED OR DISCLOSED IN WHOLE OR IN PART, OR USED TO SOLICIT QUOTATIONS FROM A COMPETITIVE SOURCE OR USED FOR MANUFACTURE BY ANYONE OTHER THAN RACAL INSTRUMENTS INC. THE INFORMATION HEREON HAS BEEN DEVELOPED AT PRIVATE EXPENSE, AND MAY ONLY BE USED FOR PURPOSES OF ENGINEERING EVALUATION AND FOR INCORPORATION INTO TECHNICAL SPECIFICATIONS AND OTHER DOCUMENTS WHICH SPECIFY PROCUREMENT OF PRODUCTS FROM RACAL INSTRUMENTS INC.

RACAL Instruments, Inc.
4 Goodyear St., Irvine, CA. 92718-2002

TITLE: POWER SUPPLY ASSY, 5-12-24

SIZE	CAGE CODE	DWG NO.	REV.
D	21793	407603	A

SCALE: / | CALC. WT | ACT WT | SHEET 1 OF 5

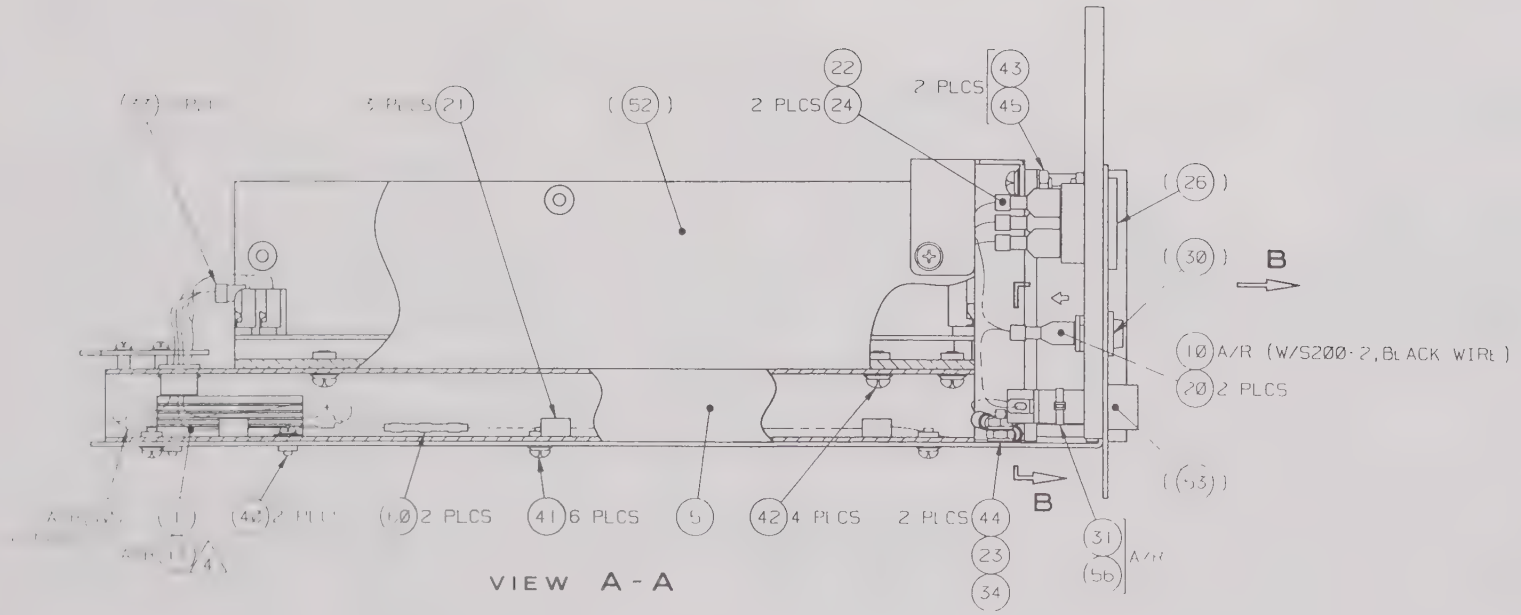

VIEW A-A

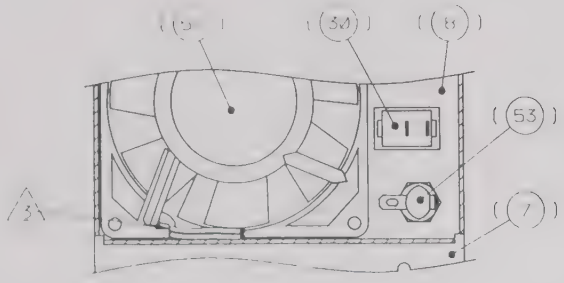

SECTION B-B

SIZE	CAGE CODE	DWG NO.	REV
D	21793	407603	A
SCALE 1/1		SHEET 2 OF 5	

ENGINEERING WIRE LIST

FROM	TO	CONDUCTOR TYPE, GAUGE, COLOR	PART NO.	WIRE LENGTH	REFERENCE
J200-L 601880	F200-END SOLDER	WIRE,TEF,STRND 16GA,BRN	521111	6"	LINE
	M23053/5-108-0				NOTE 1
S200-1 600745	F200-SIDE SOLDER	WIRE,TEF,STRND 16GA,BRN	521111	4"	LINE
PS-J1-1 602308-900	S200-1A 600745	WIRE,TEF,STRND 18GA,BLK	522000	5"	LINE
602308-105	500009				NOTE 1
PS-J1-3 602308-900	J200-N 601364	WIRE,TEF,STRND 18GA,BLU	522666	5"	NEUTRAL
NOTE 2					
PS J1-5 602308-900	CHASSIS GND 611232	WIRE,TEF,STRND 18GA,GRN/YEL	500215	6"	CHS GND
NOTE 2					
J200-GND 601880	CHASSIS GND 601509	WIRE,TEF,STRND 14GA,GRN/YEL	500271-545	5"	CHS GND
PS-TB1-1 611231	405119-E1 SOLDER	[WIRE,TEF,STRND 14GA,RED]	[500271 -222]	[5"]	+5V NOTE 3
PS TB1-2 611231	405119-E2 SOLDER	[WIRE,TEF,STRND 14GA,RED]	[500271 -222]	[5"]	+5V NOTE 3
PS-TB1-3 611231	405119-E3 SOLDER	[WIRE,TEF,STRND 14GA,BLK]	[500271 -000]	[5"]	+5RTN NOTE 3
PS-TB1-4 611231	405119-E4 SOLDER	[WIRE,TEF,STRND 14GA,BLK]	[500271 -000]	[5"]	+5RTN NOTE 3
PS-TB1-2 611231	R1-(+) SOLDER	WIRE,TEF,STRND 16GA,RED	521222	5"	+5V LOAD
	500009				NOTE 1
PS-TB1-3 611231	R1-(-) SOLDER	WIRE,TEF,STRND 16GA,BLK	521000	5"	+5RTN LOAD
	500009				NOTE 1

RACAL Instruments, Inc., 4 Goodyear St., Irvine, CA 92718

DOCUMENT TITLE	SIZE	CODE NO.	DOCUMENT NO.	REV
POWER SUPPLY ASSY,5-12-24	A	21793	407603	A
	DRN		SHEET 3 of 5	

ENGINEERING WIRE LIST

FROM	TO	CONDUCTOR TYPE, GAUGE, COLOR	PART NO.	WIRE LENGTH	REFERENCE
PS-TB1-5 611231	405119-E5 SOLDER	[WIRE,TEF,STRND 16GA,GRAY]	[521888]	[5"]	+24V NOTE 3
PS-TB1-6 611231	405119-E6 SOLDER	[WIRE,TEF,STRND 16GA,BLK/BLK]	[521000]	[5"]	24RN NOTE 3
PS-TB1-7 611231	405119 E8 SOLDER	[WIRE,TEF,STRND 16GA,ORN]	[521333]	[5"]	+12V NOTE 3
PS-TB1-8 611231	405119-E7 SOLDER	[WIRE,TEF,STRND 16GA,BLK]	[521000]	[5"]	12RN NOTE 3
PS-TB1-5 601440	405114-E10 SOLDER	[WIRE,TEF,STRND 22GA,GRAY]	[523888]	[5"]	+24V NOTE 3
PS-TB1-4 601440	405114-E11 SOLDER	[WIRE,TEF,STRND 22GA,BLK]	[523000]	[5"]	5RN NOTE 3
PS-J2-1 602309-900	405119-E12 SOLDER	[WIRE,TEF,STRND 22GA,RED]	[523222]	[5"]	SNS+ NOTE 3
602309-104					
PS-J2-3 602309-900	405119 E13 SOLDER	[WIRE,TEF,STRND 22GA,BLK]	[523000]	[5"]	SNS NOTE 3
NOTE 2					
PS-J2-2 602309-900	FAN (+)RED NAS1744 1	WIRE,TEF,STRND 22GA,RED	523222	14"	FAN+
NOTE 2					
PS-J2-4 602309-900	FAN (-)BLK NAS1744 1	WIRE,TEF,STRND 22GA,BLK	523000	14"	FAN-
NOTE 2					

RACAL Instruments, Inc., 4 Goodyear St., Irvine, CA 92718

DOCUMENT TITLE	SIZE	CODE NO.	DOCUMENT NO.	REV
POWER SUPPLY ASSY,5-12-24	A	21793	407603	A
	DRN		SHEET 4 of 5	

DOC NO. 407603

ENGINEERING WIRE LIST

FROM	TO	CONDUCTOR TYPE, GAUGE, COLOR	PART NO.	WIRE LENGTH	REFERENCE
PS-J3-5 602309-900) 602309-105	405119-E9 SOLDER	[WIRE,TEF,STRND 22GA,WHT]	[523999]	[5"]	ON/OFF NOTE 3
PS-J3-4 602309-900) NOTE 2	405119-E15 SOLDER	[WIRE,TEF,STRND 22GA,BLK]	[523000]	[5"]	RTN NOTE 3
	NOTE 1:	Insert shrink tubing over wire or fuseholder.			
	NOTE 2:	Use the same housing as the above.			
	NOTE 3:	This wiring to be done at 405119 assy level.			

DOC. NO 407603

RACAL Instruments, Inc., 4 Goodyear St., Irvine, CA 92718				
DOCUMENT TITLE	SIZE	CODE NO.	DOCUMENT NO.	REV
POWER SUPPLY ASSY,5-12-24	A	21793	407603	A
	DRN			SHEET 5 of 5

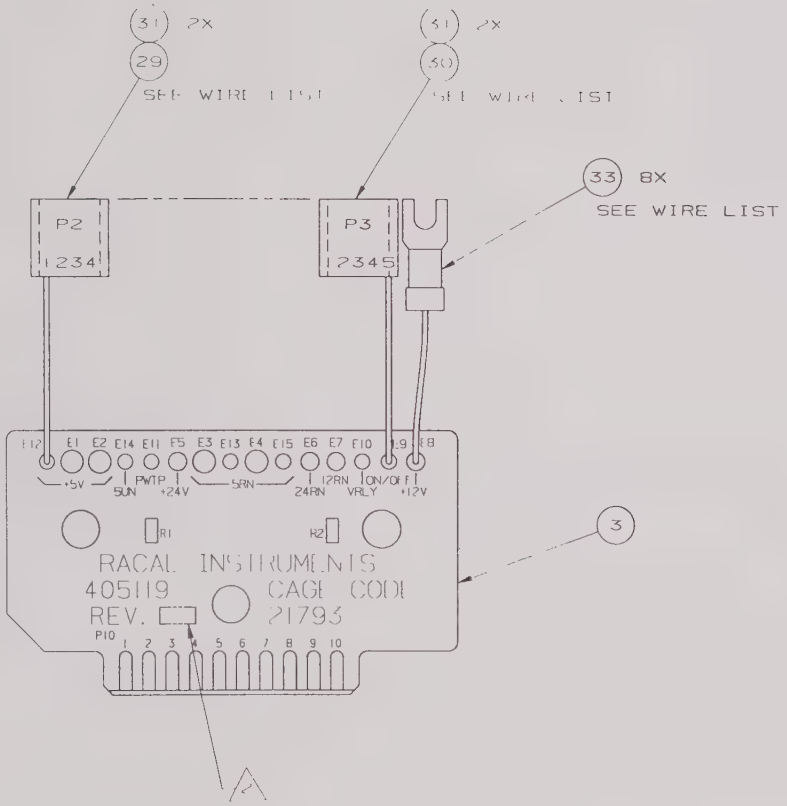

FROM	TO	WIRE DESCRIPTION	LENGTH
E1	611231	500271-222 RED WRTEF-STRI4G-2-2-2	5"
E2	611231	500271-222 RED WRTEF-STRI4G-2-2-2	5"
E3	611231	500271-000 BLK WRTEF-STRI4G-0-0-0	5"
E4	611231	500271-000 BLK WRTEF-STRI4G-0-0-0	5"
E5	611231	521888 GRY WRTEF-STRI6G-8-8-8	5"
E6	611231	521000 BLK WRTEF-STRI6G-0-0-0	5"
E7	611231	521000 BLK WRTEF-STRI6G 0-0-0	5"
E8	611231	521333 ORG WRTEF STRI6G 3-3-3	5"
E9	P3-5 602309-900	523999 WHT WRTEF-STR22G-9-9-9	5"
E10	601440	523888 GRY WRTEF-STR22G-8-8-8	5"
E11	601440	523000 BLK WRTEF STR22G-0-0-0	5"
E12	P2 1 602309 900	523222 RED WRTEF-STR22G-2-2-2	5"
E13	P2 3 602309 900	523000 BLK WRTEF-STR22G 0-0-0	5"
E15	P3 4 602309 900	523000 BLK WRTEF-STR22G-0 0-0	5"

NOTES:

REFERENCE SCHEMATIC 435119.

2 INK STAMP CURRENT REVISION ON COMPONENT SIDE APPROXIMATELY WHERE SHOWN

PROPRIETARY NOTICE

THIS DOCUMENT AND THE TECHNICAL DATA HEREIN DISCLOSED ARE PROPRIETARY TO RACAL INSTRUMENTS INC. AND SHALL NOT, WITHOUT THE EXPRESS WRITTEN PERMISSION OF RACAL INSTRUMENTS INC. BE USED, RELEASED OR DISCLOSED IN WHOLE OR IN PART, OR USED TO SOLICIT QUOTATIONS FROM A COMPETITIVE SOURCE OR USED FOR MANUFACTURE BY ANYONE OTHER THAN RACAL INSTRUMENTS INC. THE INFORMATION HEREON HAS BEEN DEVELOPED AT PRIVATE EXPENSE, AND MAY ONLY BE USED FOR PURPOSES OF ENGINEERING EVALUATION AND FOR INCORPORATION INTO TECHNICAL SPECIFICATIONS AND OTHER DOCUMENTS WHICH SPECIFY PROCUREMENT OF PRODUCTS FROM RACAL INSTRUMENTS INC.

RACAL Instruments, Inc.
4 Goodyear St., Irvine, CA. 92618-2002

TITLE
PCB ASSY, 20 PIN CONNECTOR, 1255A

SIZE	CAGE CODE	DWG NO.	REV.
D	21793	405119	A

SCALE 1/1 | DATE WT | ACT WT | SHEET 1 OF

NOTES:

1. E1 - E4 USES 14 GUAGE WIRE.
2. E5 - E8 USES 16 GUAGE WIRE
3. E9 - E15 USES 22 GUAGE WIRE.
4. RESISTOR VALUES ARE IN OHMS, +/-1%, .10W UNLESS OTHERWISE SPECIFIED.

HIGHEST REF. DES.
P10
R2
E15

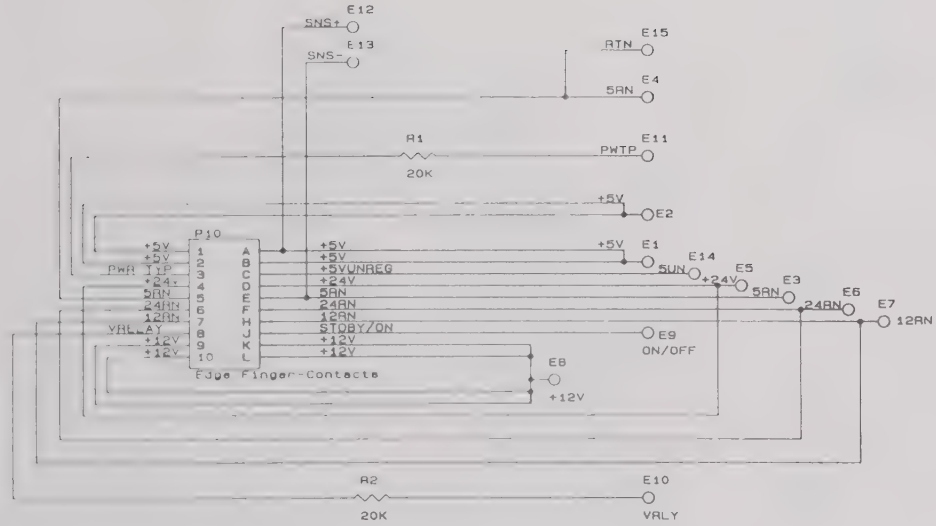

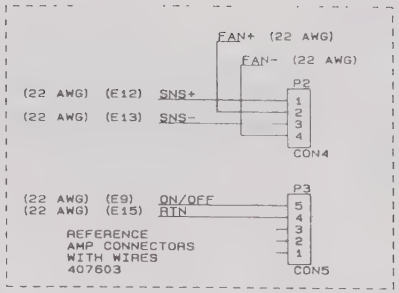

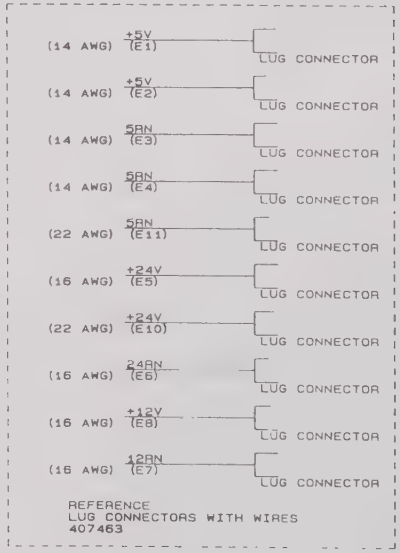

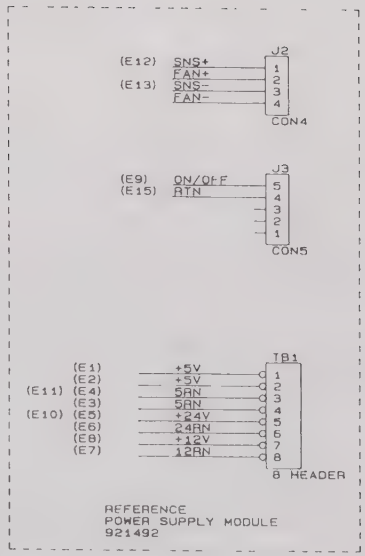

PROPRIETARY NOTICE

THIS DOCUMENT AND THE TECHNICAL DATA HEREIN DISCLOSED ARE PROPRIETARY TO RACAL INSTRUMENTS INC., AND SHALL NOT, WITHOUT THE EXPRESS WRITTEN PERMISSION OF RACAL INSTRUMENTS INC. BE USED, RELEASED OR DISCLOSED IN WHOLE OR IN PART, OR USED TO SOLICIT QUOTATIONS FROM A COMPETITIVE SOURCE OR USED FOR MANUFACTURE BY ANYONE OTHER THAN RACAL INSTRUMENTS INC. THE INFORMATION HEREON HAS BEEN DEVELOPED AT PRIVATE EXPENSE, AND MAY ONLY BE USED FOR PURPOSES OF ENGINEERING EVALUATION AND FOR INCORPORATION INTO TECHNICAL SPECIFICATIONS AND OTHER DOCUMENTS WHICH SPECIFY PROCUREMENT OF PRODUCTS FROM RACAL INSTRUMENTS INC.

RACAL Instruments, Inc.
4 Goodyear St., Irvine, CA. 92618-2002

TITLE
SCHEM., 20PIN CONN BD 1255A

SIZE	CAGE CODE	DWG NO.	REV.
B	21793	435119	A

SCALE ----- | CALC WT | ACT WT | SHEET 1 OF 1

Parts Lists

The following pages contain the replacement parts lists for the major subassemblies of the 1255A:

- Power Supply Assembly (P/N 407603)
- CPU Assembly (P/N 405097)
- Backplane Assembly (P/N 405098).

407604	Final Assy, Model 1255A	6-36
407607	Shipping Kit, 1255A	6-36
407608	Chassis Assy, 1255A	6-37
405098	PCB Assy, Backplane	6-38
405097	PCB Assy, CPU	6-39
407603	Power Supply Assy, 1255A	6-41
405119	PCB Assy, 20 Pin Conn Bd	6-42

List of Suppliers 6-43

407604 - ENHANCED SWITCH SYSTEM

REF DESIG	RACAL INST P/N	DESCRIPTION	FSC	MANUFACTURER'S P/N
{1}1	407607	SHIPPING KIT, 1255A	21793	407607
{2}1	407608	CHASSIS ASSY, 1255A	21793	407608
{3}1	600620	CABLE, POWER, AC LINE	70903	17250B

407607 - SHIPPING KIT, 1255A

REF DESIG	RACAL INST P/N	DESCRIPTION	FSC	MANUFACTURER'S P/N
{1}1	980810	MANUAL, 1255A	21793	980810
{3}3	407428	1 SLOT BLANKING PLATE	21793	407428
{4}2	456414	EXTRUSION, RACK FLANGE	21793	456414
{5}4	615074	SCREW, PPH, 8-32X.375	-	-

407608 - CHASSIS ASSY, 1255A

REF DESIG	RACAL INST P/N	DESCRIPTION	FSC	MANUFACTURER'S P/N
{1}1	405097	PCB ASSY, CPU	21793	405097
{2}1	405098	PCB ASSY, BACKPLANE	21793	405098
{4}1	407603	POWER SUPPLY ASSY, 5-12-24	21793	407603
{6}2	454878	INSERT, CORNER, MODIFIED	21793	454878
{8}1	456397	PANEL, FRONT	21793	456397
{9}1	456399	COVER, BOTTOM	21793	456399
{10}1	456400	COVER, TOP	21793	456400
{11}1	456401	CORNER POST, RIGHT	21793	456401
{12}1	456402	CORNER POST, LEFT	21793	456402
{13}1	456403	PANEL, RIGHT SIDE	21793	456403
{14}1	456404	PANEL, LEFT SIDE	21793	456404
{15}1	456405-001	RAIL, CHASSIS, TOP	21793	456405-001
{16}1	456405-002	RAIL, CHASSIS, BOTTOM	21793	456405-002
{17}2	456406	TRIM, SIDE PANEL	21793	456406
{18}2	456407	VENT, SIDE PANEL	21793	456407
{19}1	456408	PLATE, CARD GUIDE	21793	456408
{20}1	456409	PANEL, CENTER SUPPORT	21793	456409
{21}1	456413	BAFFLE	21793	456413
{22}1	456582	OVERLAY, FRONT PANEL, 1255A	21793	456582
{25}1	601246	SWITCH, ROCKER, SPST	7W718	1801-1152
{27}4	610379	WASHER, NYLON FLAT, #4	95987	NW4-2812
{28}1	610388	GROMMET, CATERPILLAR, .040 THICK	03296	G51H-A
{29}2	610890	SCREW, TAPTITE, THREAD FORMING, 6-32 X .375	78189	-
{30}6	610909	SCREW, PPH, 6-32 X .500	78189	TRI-632X.500
{31}6	610925	SCREW, PPH, 6-32 X 1.000, 10225, CAD. PLATE	SOSCR	ROLOK
{33}4	611062	FOOT, BOTTON, BLK	06915	FF-004
{34}20	611069	CARD GUIDE, .06X6INCH	18677	23071-5
{35}2	611359	RIVET, POP CTSK, 120 DEG FH	05693	BSC-43
{38}4	615076	SCREW, PPH, 8-32X.500	-	-
{39}26	615557	SCREW, PFH, 6-32 X .312	-	-
{41}10	616251	SCREW, PPH, SEMS ASSY, 4-40X.250	78189	SEMS W/SQ CONE WA.
{42}4	616266	SCREW, PPH, SEMS ASSY, 10-32X.500	78189	SEMS W/SQ CONE WA.
{44}2	617167-005	NUT, KEPS, HEX W/LK WASHER, 4-40	78189	511-041800-00
{46}A/R	920008	LOCTITE	05972	495-50
{47}A/R	920962	LOCTITE, 242, MED STR.	05972	272
{48}2	921159	HANDLE, 3 1/2L, 10-32T	06540	10854A1032

405098 - PCB ASSEMBLY, BACKPLANE

REF DESIG	RACAL INST P/N	DESCRIPTION	FSC	MANUFACTURER'S P/N
CR1	210148	DIODE, LIGHT EMITTING, GRN,	91802	4304H5
CR2	210148	DIODE, LIGHT EMITTING, GRN,	91802	4304H5
CR3	210071	LAMP, HI EFNCY RED, SOLID STATE, 2.2V, .12W	50434	HP5082-4650
CR5	210148	DIODE, LIGHT EMITTING, GRN,	91802	4304H5
J1-J8	602245	CONNECTOR, PCB RECEPT, 64 PIN	00779	650458-4
J9	601228	CONNECTOR, PCB, 64-PIN	00779	532523-2
J10	600670	CONNECTOR, 10-PIN	71785	252-10-30-160
Q2	200200	TRANSITOR NPN	21793	200200
TP1-TP5	600786	POST, TERMINAL, MACHINE APPLIED STRIP	00779	1-87022-0
Z1	080022	RESISTOR NETWORK,CERMET,220 OHM,14P,7R,2PCT	11236	760-3-R220 OHM
Z2	080008	RES NETWORK, 16P8R, 1K, 2 PERCENT	11236	761-3-R1K
{9}1	415098	PCB, BACKPLANE (UNLOADED)	21793	415098
{18}2	600745	TERMINAL, CRIMP	00779	2-520194-2
{19}1	610777	CABLE TIE	16956	08-432
{20}A/R	501376	TUBING, TEFLON, 20 GA, THIN WALL	29005	TW20GA
{21}A/R	523444	WIRE, TEFLON STRANDED, 22 GA, YEL	92194	5855/7-YEL
{22}A/R	523888	WIRE, TEFLON STRANDED, 22 GA. GRY	92194	5855/7-GRY
{26}A/R	500002	TUBING, SHRINK, .187 ID	29005	RNF-100-0-3/16

405097 - CPU PCB ASSEMBLY

REF DESIG	RACAL INST P/N	DESCRIPTION	FSC	MANUFACTURER'S P/N
C1	110143	CAP, TANTA, 1 UF, 35V, 20 PERCENT	05397	T355A105M035AS
C2-C20	100133	CAP, CERAMIC, 1UF, LOW PROFILE, 20PCT	72982	8131LP-100-Z5U-1
C21	100062	CAP, CERAM, .01 UF 100V, 10 PERCENT	05397	C320C103K1R5CA
C22	100062	CAP, CERAM, .01 UF 100V, 10 PERCENT	05397	C320C103K1R5CA
C23-C30	100133	CAP, CERAMIC, 1UF, LOW PROFILE, 20PCT	72982	8131LP-100-Z5U-1
C31	110126	CAP, TANTA, 6.8UF, 35V, 20 PERCENT	05397	T355F685M035A5
C32	100133	CAP, CERAMIC, 1UF, LOW PROFILE, 20PCT	72982	8131LP-100-Z5U-1
C33	100133	CAP, CERAMIC, 1UF, LOW PROFILE, 20PCT	72982	8131LP-100-Z5U-1
C34	100097	CAPACITOR, FIXED CER 12PF	56289	C030B102E120J
C35	100087	CAP, CERAM, 4.7 PF, 100V, 5PCT	72982	8101-A100-C0G479J
C36	110226-475	CAP, TANTA, 4.7UF, 25V,	05397	T350C475M025AS
C37	110226-475	CAP, TANTA, 4.7UF, 25V,	05397	T350C475M025AS
C38	110143	CAP, TANTA, 1 UF, 35V, 20 PERCENT	05397	T355A105M035AS
C39	110143	CAP, TANTA, 1 UF, 35V, 20 PERCENT	05397	T355A105M035AS
C40	100117	CAP, CERAMIC, 470PF, 50V, 20 PCT	56289	10TS-T47
C41	100117	CAP, CERAMIC, 470PF, 50V, 20 PCT	56289	10TS-T47
CR1	211083	DIODE, SILICON	81349	1N916B
CR2	211083	DIODE, SILICON	81349	1N916B
E1-E3	600786	POST, TERMINAL, MACHINE APPLIED STRIP	00779	1-87022-0
J2	601227	CONNECTOR, PCB, 64-PIN, SOCKET PLUG	00779	531796-2
J201	602244	CABLE ASSY, RS-232	21793	602244
J202	601602	CONNECTOR, D-SUB, 9-PIN, MALE	00779	205204-4
J203	601253	CONNECTOR, PCB, 24-PIN	00779	553811-3
J204	602244	CABLE ASSY, RS-232	21793	602244
P201	601935	CONNECTOR, HEADER, 10 PIN	52072	CA-D10-23B-43
Q1	200295	TRANSISTOR, N-CHAN, MOSFET	17856	VN10KM
Q2	200298	TRANSISTOR, NPN	04713	2N3904
R1	000101	RES, CARB COMP, 100 OHM, 5 PERCENT, 1/4W	81349	RC07GF101J
R2	010985	RES, METAL FILM, 6.04K, 1 PERCENT, 1/8W	81349	RN55C6041F
R3	000103	RES, CARB COMP, 10K, 5 PERCENT, 1/4W	81349	RC07GF103J
R4	000103	RES, CARB COMP, 10K, 5 PERCENT, 1/4W	81349	RC07GF103J
R5	010873	RES, METAL FILM, 2.21K, 1 PERCENT, 1/8W	81349	RN55C2211F
R6	000470	RES, CARB COMP, 47 OHM, 5 PERCENT, 1/4W	81349	RC07GF470J
R7	000470	RES, CARB COMP, 47 OHM, 5 PERCENT, 1/4W	81349	RC07GF470J
R8	010924	RES, METAL FILM, 1.24K, 1/8W, 1 PERCENT	81349	RN55C1241F
R9	000102	RES, CARB COMP, 1K, 5 PERCENT, 1/4W	81349	RC07GF102J
R10	000201	RES, CARBON, 200 OHM, 5 PERCENT, 1/4W	81349	RC07GF201J
R11	000102	RES, CARB COMP, 1K, 5 PERCENT, 1/4W	81349	RC07GF102J
S201	601278	SWITCH, DIP, RIGHT ANGLE, 6-PIN	09353	BD06-AV
TP1-TP10	600786	POST, TERMINAL, MACHINE APPLIED STRIP	00779	1-87022-0
U1	230547	IC, QUAD COMPARATOR	27014	LM339N/A-1
U2	230547	IC, QUAD COMPARATOR	27014	LM339N/A-1
U3	230742	IC, 8-LINE TO 3-LINE PRIORITY ENCODER	04713	SN74LS148N
U4	230577	IC, OCTAL BUFFER	27014	74LS244
U5	230357	IC, DUAL JK NEG. EDGE-TRIG. F/F	04713	SN74LS73AN
U6	230336	IC, HEX SCHMITT TRIGGER	01295	74LS14
U7	231551-001	IC, PROGRAMMED PAL	21793	231551-001
U9	230956	IC, MEMORY, RAM, 32K X 8	21793	230956
U11	231548-002	IC, MEMORY	21793	231548-002
U12	230760	IC, HIGH-PERFORMANCE CMOS QUAD OR GATE	27014	MM74HC32N
U13	230719	IC, FAST NAND	07263	74F00
U14	230550	IC, OCTAL LATCH	27014	74LS374N
U16	230459	IC, OCTAL GPIB TRANS	01295	SN75160AN3
U17	230793	IC, GPIB CONTROLLER	01295	TMS9914ANL
U18	230782	IC, DUAL 1-OF-4 DECODER	07263	74F139PC
U19	230710	IC, DIGITAL DECODER	07263	74F138
U20	230577	IC, OCTAL BUFFER	27014	74LS244
U23	230472	IC, OCTAL GPIB TRANS	01295	SN75161AN3
U24	231541	IC, MEMORY	21793	231541

405097 - CPU PCB ASSEMBLY

REF DESIG	RACAL INST P/N	DESCRIPTION	FSC	MANUFACTURER'S P/N
U26	230956	IC, MEMORY, RAM, 32K X 8	21793	230956
U28	231548-004	IC, MEMORY	21793	231548-004
U29	230744	IC, MICROPROCESSOR, 68K, 8 MHZ	04713	MC68000L10/G8
U30	230428	IC, QUAD 2-INPUT OR GATE	01295	SN74LS32N3
U31	230705	IC, HEX INVERTER	07263	74F04PC
U32	231544	IC, DUAL ASYNC RECVR/TRNSMTR	04713	MC68681P
U33	231545	IC, INTERFACE, RS-232 TRANSMTR/RCVR	04713	MC68681P
U34	231543	IC, 8-BIT PARALLEL IN/SERIAL OUT/REG	35784	74HCT166N
U35	231543	IC, 8-BIT PARALLEL IN/SERIAL OUT/REG	35784	74HCT166N
U36	231546	IC, 8-INPUT UNIV. SHIFT/STORAGE REG	04713	MC74ACT299N
U37	230766	IC, INTERFACE, DIFFERENTIAL	27014	DS26LS32CN
U38	230779	IC, LINE DRIVER, QUAD, 3-STATE OUTPUTS	04713	AM26LS31P
U39	230779	IC, LINE DRIVER, QUAD, 3-STATE OUTPUTS	04713	AM26LS31P
VR1	230551	IC, VOLTAGE REFERENCE	24355	AD589JH
X1	921184	OSCILLATOR, 3.68 MHz	71450	mp037
Y1	921005	OSCILLATOR, CLOCK, 8 MHZ, 0.1 PCT	04713	RASCO-1
Z1	080077	RES NETWORK, 8P4R, 220K, 2 PERCENT, 1.1W	11236	750-83-R220K
Z2	080005	RES NETWORK, 6P8R, 10K, 2 PERCENT, .9W	11236	750-61-R10K
Z3	080076	RES NETWORK, 6P3R, 10K, 2 PERCENT	11236	750-63-R10K
Z4	080005	RES NETWORK, 6P8R, 10K, 2 PERCENT, .9W	11236	750-61-R10K
Z5	080005	RES NETWORK, 6P8R, 10K, 2 PERCENT, .9W	11236	750-61-R10K
Z6	080020	RES NETWORK, 8P7R, 10K, 2 PERCENT	11236	750-81-R10K
Z7	080020	RES NETWORK, 8P7R, 10K, 2 PERCENT	11236	750-81-R10K
Z8	080037	RES NETWORK, 6P3R, 1K, 2 PERCENT, .9W	11236	750-63-R1K
Z9	080005	RES NETWORK, 6P8R, 10K, 2 PERCENT, .9W	11236	750-61-R10K
Z10	080020	RES NETWORK, 8P7R, 10K, 2 PERCENT	11236	750-81-R10K
{65}2	920891	SOCKET, 28-PIN	52072	CA-28S-TSD-BC
{68}2	611092	HARDWARE KIT, D-SUB, 4-40 THD, FEMALE	00779	205817-3
{72}3	611053	TERMINAL, CRIMP	00779	530553-2
{76}A/R	920962	LOCTITE, 242, MED STR.	05972	272
{77}1	630010	HARDWARE KIT, STANDOFF, STUD MOUNT	00779	552633-3
{78}2	616252	SCREW, PPH, SEMS ASSY, 4-40X.312	78189	63-040545-25
{79}1	456393	PLATE, BUTCH, COMPUTER	21793	456393
{80}A/R	500143	TUBING, SHRINK FIT, .062 ID, BLK	29005	RNF-100-1-1/16
{81}A/R	500009	TUBING, SHRINK,. 12 ID, BLK	29005	RNF-100-1-1/8
{84}A/R	524999	WIRE, TEFLON STRANDED, 24 GA, WHT	-	-
{85}A/R	524555	WIRE, TEFLON STRANDED, 24 GA, GRN	-	-
{86}A/R	524666	WIRE, TEFLON STRANDED, 24 GA, BLU	-	-
{87}1	415097	PCB, COMPUTER (UNLOADED)	21793	415097
{89}3	601426	TERMINAL, CRIMP	00779	745229-4

407603 - POWER SUPPLY ASSY, 5-12-24

REF DESIG	RACAL INST P/N	DESCRIPTION	FSC	MANUFACTURER'S P/N
J200	602306	CONNECTOR, POWER, PLUG, 3 PIN	60046	42R02-3212-150-D3
R1	020737-023	RES, WW, 1.5 OHM, 50W, 5 PCT	91637	RH-50-1.5OHM-5PCT
S200	602310	SWITCH, ROCKER, SNAP-IN, SPST, 10A	07858	E20M11J01
{3}1	405119	PCB ASSY, 20 PIN CONNECTOR BOARD	21793	405119
{5}1	456578	BRACKET, AIR DUCT, 1255A	21793	456578
{6}1	456579	BRACKET, CHASSIS STIFFENER	21793	456579
{7}1	456580	PLATE, REAR POWER SUPPLY, 1255A	21793	456580
{8}1	456581	CHASSIS, POWER SUPPLY, 1255A	21793	456581
{10}A/R	500009	TUBING, SHRINK,. 12 ID, BLK	29005	RNF-100-1-1/8
{11}A/R	920469	THERMAL JOINT COMPOUND	13103	250
{12}A/R	500271-545	WIRE, TEFLON STRANDED, 14 GA GRN/YEL	92194	5859-28
{13}A/R	521000	WIRE, TEFLON STRANDED, 16 GA, BLK	92194	5858-BLK
{14}A/R	521111	WIRE, TEFLON STRANDED, 16 GA, BRN	92194	5858-BRN
{15}A/R	521222	WIRE, TEFLON STRANDED, 16 GA, RED	92194	5858-RED
{16}A/R	522000	WIRE, TEFLON STRANDED, 18 GA, BLK	92194	5857-BLK
{17}A/R	522215	WIRE, TEFLON STRANDED, 18 GA. RED/BRN/GRN	92194	5857-RED/BRN/GRN
{18}A/R	522666	WIRE, TEFLON STRANDED, 18 GA, BLU	92194	5857-BLU
{19}A/R	523000	WIRE, TEFLON STRANDED, 22 GA, BLK	92194	5855-BLK
{20}2	600745	TERMINAL, CRIMP, 22-18 GA	00779	2-520194-2
{21}3	600961	CLIP, CABLE, ADHESIVE MOUNT	06383	ACC19-A-C
{22}1	601364	TERMINAL, CRIMP, 22-18 GA	58730	RA2573
{23}1	601509	TERMINAL, CRIMP #6, 16-14 GA	21793	601509
{24}2	601880	DISCONNECT, 16-14 GA	00779	3-520140-2
{27}1	602308-105	CONNECTOR, CABLE, RECEPT, 5 PIN	00779	770849-5
{28}3	602308-900	CONNECTOR, CRIMP, .156 HOUSING	00779	640706-1
{29}2	602309-900	CONTACT, CRIMP, .100 HOUSING	00779	770666-1
{31}A/R	610777	CABLE TIE	16956	08-432
{33}2	611231	TERMINAL, CRIMP, INSUL., SPADE, #6, 16-14GA	00779	328281
{34}1	611232	TERMINAL, CRIMP, INSUL., RING #6, 22-18GA	00779	36149
{35}1	611325	BUSHING, SNAP	28520	2053
{38}4	615562	SCREW, PFH, 6-32X.750	-	-
{40}5	616252	SCREW, PPH, SEMS ASSY, 4-40X.312	78189	SEMS W/SQ CONE WA.
{41}6	616255	SCREW, PPH, SEMS ASSY, 6-32X.312	78189	SEMS W/SQ CONE WA.
{42}6	616260	SCREW, PPH, SEMS ASSY, 8-32 X .375	78189	SEMS W/SQ CONE WA.
{43}2	616261	SCREW, PPH, SEMS ASSY, 8-32 X .500	78189	SEMS W/SQ CONE WA.
{44}6	617167-003	NUT, HEX, 6-32 STL-ZINC KEPS	78189	511-061800-00
{45}2	617167-004	NUT, KEPS, HEX, EXT TOOTH LK WASHER, 8-32	78189	511-081800-00
{48}1	920729	LABEL, WARNING	21793	920729
{50}1	921426	FILTER, FAN 3.25 CENTER, 30X30 SCREEN	17504	FF365-1618
{51}1	921491	FAN, 12VDC, 3.78W, 55CFM	62292	3412GH
{52}1	921492	POWER SUPPLY MODULE, 225/250W	63865	QP2F1AV-2A
{53}1	921493	FUSE HOLDER, 3AG	75915	3455HS1
{54}1	921498	FUSE, SLO-BLO, 5A, 250V	61935	034.3124
{56}A/R	M23053/5-10	SLEEVING, INSULATED, HEAT SHRINK, .50D, BLK	81349	M23053/5-180-0
{60}2	NAS1744-1	SPLICE, CONDUCTOR, .075-.095	80205	NAS1744-1

405119 - PCB ASSY, 20 PIN CONNECTOR, 1255A

REF DESIG	RACAL INST P/N	DESCRIPTION	FSC	MANUFACTURER'S P/N
R1,R2	050095-001	RES, CHIP, 20K, .1W, 5PCT	91637	TNPW-08052002DT9
{3}1	415119	PCB, 20 PIN CONNECTOR, 1255A, (UNLOADED)	21793	415119
{7}A/R	500271-000	WIRE, TEFLON STRANDED, 14 GA, BLK	92194	5859-2
{8}A/R	500271-222	WIRE, TEFLON STRANDED, 14 GA, RED	92194	5859-3
{11}A/R	521000	WIRE, TEFLON STRANDED, 16 GA, BLK	92194	5858-BLK
{13}A/R	521333	WIRE, TEFLON STRANDED, 16 GA, ORG	92194	5858-ORG
{14}A/R	521888	WIRE, TEFLON STRANDED, 16 GA, GRY	92194	5858-GRY
{17}A/R	523000	WIRE, TEFLON STRANDED, 22 GA, BLK	92194	5855/7-BLK
{20}A/R	523888	WIRE, TEFLON STRANDED, 22 GA. GRY	92194	5855/7-GRY
{22}A/R	523222	WIRE, TEFLON STRANDED, 22 GA, RED	92194	5855/7-RED
{23}A/R	523999	WIRE, TEFLON STRANDED, 22 GA, WHT	92194	5855/7-WHT
{28}2	601440	TERMINAL, CRIMP, NYLON INSULATED	58730	RA2213
{29}1	602309-104	CONNECTOR, 4 PIN CABLE HOUSING	00779	770602-4
{30}1	602309-105	CONNECTOR, 5 PIN CABLE HOUSING	00779	770602-5
{31}4	602309-900	CONTACT, CRIMP, .100 HOUSING	00779	770666-1
{33}8	611231	TERMINAL, CRIMP, INSUL., SPADE, #6, 16-14GA	00779	328281

FSC	SUPPLIER
00779	AMP, INC. HARRISBURG, PA
03296	NYLON MOULDING TEMPLE CITY CA
05693	CHERRY COMMERCIAL FASTNERS (DIV. OF TEXTRON, INC. SANTA ANA, CA
05972	LOCTITE CORP. HARTFORD, CT
06383	PANDUIT CORP. TINLEY PARK, IL
06540	AMATOM ELECTRONIC HARDWARE NEW ROCHELLE, NY
06915	RICHCO PLASTICS CO. CHICAGO, IL
07858	ARROW HART INTERNATIONAL SCARBOROUGH, ONTARIO, CANADA
16956	DENNISON MFG. CO. FRAMINGTON, MA
18677	SCANBE MANUFACTURING CO. EL MONTE, CA
21793	RACAL INSTRUMENTS INC. IRVINE, CA
28520	HEYCO KENILWORTH, NJ
29005	STORM PRODUCTS LOS ANGELES, CA
58730	THOMAS & BETTS CO. ELIZABETH, NJ
60046	SCIOTO POWER DYNAMIC INC. WEST ORANGE, NJ
61935	SCHURTER INC. PETALUMA, CA
63865	CHEROKEE INTERNATIONAL INC. TUSTIN, CA
67131	VICOR CORP. ANDOVER, MA
70903	BELDON CORP. CHICAGO, IL
75915	LITTELFUSE, INC. DES PLAINES, IL
78189	ILLINOIS TOOL WORKS, INC. (SHAKEPROOF DIV.) ELGIN, IL
7W718	MARQUARDT SWITCHES INC. CAZENOVIA, NY
85480	W.H. BRADY (INDUSTRIAL PRODUCTS DIV.) MILWAUKEE, WI
91637	DALE ELECTRONICS INC. COLUMBUS, NE
92194	ALPHA WIRE ELIZABETH, NJ
95987	OBSOLETE, SEE 85480
ALFCO	AIR MAZE (ALFCO DIVISION) CARPENTERIA, CA
SOSCR	SOUTHERN SCREW HARTFORD, CT

Customer Support

Racal Instruments has a complete Service and Parts Department. If you need technical assistance or should it be necessary to return your product for repair or calibration, call 1-800-722-3262, or call 714-859-8999 and ask for Customer Support. You may also contact Customer Support via E-Mail at:

customer_service@rdii.com

Customer Support may also be contacted through the Racal Instruments On-Line BBS. Call (714) 859-2527. Set your modem software for 8 bits, no parity, 1 stop bit. The BBS supports baud rates up to 14,400.

If you require parts to repair the product at your facility, call 1-800-222-3262, or call 714-859-8999 and ask for the Parts Department.

When sending your instrument in for repair, complete the form in the back of this manual.

For worldwide support, refer to **Section 8: Support Offices**.

Reshipment Instructions

Use the original packing material when returning the switching module to Racal Instruments for calibration or servicing. The original shipping carton and the instrument's plastic foam will provide the necessary support for safe reshipment.

If the original packing material is unavailable, wrap the switching module in plastic sheeting and use plastic spray foam to surround and protect the instrument.

Reship in either the original or a new shipping carton.

Support Offices

Racal Instruments, Inc.
4 Goodyear Street
Irvine, **CA** 92718-2002
Phone: 714-859-8999
800-RACAL-ATE
800-722-2528
FAX: 714-849-2505

Racal Instruments Ltd
480 Bath Road
Slough, Berkshire
SL1 6BE, **England**
Phone: (0628) 604455
FAX: (0628) 662017

Racal Systems Electronique s.a.
18 Avenue Dutartre
78150 LeChesnay, **France**
Phone: (1) 3955 8888
FAX: (1) 3955 6735

Racal Systems Elettronica Srl
Strada 2-Palazzo C4
20090 Milanofiori Assago
Milan, **Italy**
Phone: (02) 5750 1796
FAX: (02) 5750 1828

Racal Elektronik System GmbH
Frankenforster Strasse 21
51427 Bergisch-Gladbach 1,**Germany**
Phone: 2204 92220
FAX: 2204 21491

Racal Australia Pty Ltd
3 Powells Road
Brookvale, NSW 2100, **Australia**
Phone: (2) 936 7000
FAX: (2) 936 7036

Racal Electronics Pte Ltd
26 Ayer Rajah Crescent, 04-06/07
Ayer Rajah Industrial Estate, **Singapore** 0513
Phone: 7792200
FAX: 7785400

Appendix A

Specifications

General

1260 Series Support

The 1255A supports the following Racal Instruments 1260-Series switch modules:

1260-12
1260-13
1260-14, 14C, 14CMOS
1260-16
1260-17, 17A
1260-18
1260-20, 20B
1260-30A, 30B, 30C, 30D
1260-35, 35A
1260-37, 37A
1260-38, 38T
1260-39, 39S
1260-40A, 40B, 40C
1260-45A, 45B, 45C
1260-50C, 50D
1260-54
1260-58
1260-59A, 59B
1260-60A, 60B
1260-64A, 64B, 64C
1260-66A, 66B, 66C
1260-75A, 75B
1260-93A, 93B

Switch Card Interface

VXI Local Bus control provided by internal CPU; does not use 1260 Option-01 controller

Annunciators

ON: Indicates power on
FAIL: Indicates self-test failure
ADDR: Indicates 1255A is being addressed by the host computer
SRQ: Indicates SRQ bit in status byte is set

Host Interface

IEEE-488 or RS-232 subset, manually selected.
RS-232 baud rates: 300; 600; 1,200; 2,400; 4,800; 19,200

Command Set

Identical to current 1260 switch family except modifications to SYNC and TTLTRG.

VXI*plug&play*	Drivers provided for all switching modules supported by the 1255A

Electrical Power

Power Supply Type	Switched mode PWM
AC Input	90-132/185-250 VAC, autoranging, 47-63Hz 4A MAX
DC Supply Output	+5V @ 10A +12V @ 4A +24V @ 4A

Mechanical

Dimensions	133.4 mm (5.25 in) high 425.5 mm (16.75 in) wide 397.0 mm (15.63 in) deep
Chassis weight	17.2 lbs. (7.8kg)
Rack mounting	Standard (indicator panel to front) or reversed (switch cards to front)

Environmental

Designed to meet MIL-T-28800E Type III, Class 5, Style F

Temperature	Operating:	0° to +50° C
	Storage:	-40° C to +70° C
Humidity	95% non-condensing	
Vibration	0.013 in. double-amplitude, 5-55Hz	

Product Safety

Safety Characteristics	EN61010-1, UL 3111-1, cUL 3111-1
IEC Characteristics	Installation Category II Pollution Degree 2 Safety Class I

Appendix B

Theory of Operation

The 1255A Switch System consists of the following functional blocks:

- Power Supply
- CPU
- Backplane

In addition, the 1255A Switch System uses 1260-Series switching modules, which are purchased separately.

Power Supply Assembly

The power supply accepts power from the AC power mains and converts it to DC power for the CPU, backplane, and switching modules. Refer to **Section 6: Maintenance** for the schematic.

Backplane Assembly

The backplane serves two functions:

- It provides the interconnections between the Power Supply, CPU, front-panel power switch, and switch modules.
- It holds the LED indicators for the front panel.

The following signals and power are routed by the Backplane Assembly:

- *+5VDC* power. This power path from the Power Supply Assembly is connected to the CPU and switching modules.
- *+12VDC* power. This power path from the Power Supply Assembly is connected to the Switching Modules, providing power for their relays.
- *+24VDC* power. This power path from the Power Supply Assembly is connected to the switching modules, providing power for their relays.
- *VRELAY* signal. This signal, from the Power Supply Assembly to the CPU, allows the CPU to check the +24V power supply output voltage.
- *PWRTYP* signal. This signal, from the Power Supply Assembly to the CPU, informs the CPU whether this is a system that provides +5V/+24V/+12V or 25V/+24V only.

- *STDBY/ON* signal. This provides the status of the front-panel power switch to the Power Supply Assembly.

- *FAILLED* signal. This signal, from the CPU, drives the front-panel FAIL indicator directly. The indicator is mounted on the circuit side of the Backplane Assembly.

- *ADDRLED* signal. This signal, from the CPU, drives the front-panel ADDR indicator directly. The indicator is mounted on the circuit side of the Backplane Assembly.

- *SRQLED* signal. This signal, from the CPU, drives the front-panel SRQ indicator directly. The indicator is mounted on the circuit side of the Backplane Assembly.

- *OPRLED* signal. This signal, from the CPU, controls the front-panel ON indicator. Transistor Q2 inverts this signal and drives the indicator. The indicator is mounted on the circuit side of the Backplane Assembly.

- VXI Local Bus signals. These signals each are connected to the CPU and are daisy-chained to each of the four switching modules. The Local Bus signals include:

    - *CLK+* and *CLK-* (differential pair)
    - *A/D+* and *A/D-* (differential pair)
    - *R/W+* and *R/W-* (differential pair)
    - *STROBE+* and *STROBE-* (differential pair)
    - *DATA+* and *DATA-* (differential pair)
    - *BPRST*
    - *LBUSIRQ*

These signals connect to the same pins on the switching modules as in a 1261 VXIbus system.

CPU Assembly

The CPU Assembly consists of the following functional blocks:

- Reset/Voltage Monitor
- Microprocessor
- Address Decoder
- Interrupt Encoder
- Static RAM
- Erasable Programmable Read-Only Memory (EPROM)
- Non-Volatile RAM
- GPIB Interface
- DUART/Timer
- GPIB Configuration Switch
- External Trigger Conditioner
- Discrete Input Register
- Discrete Output Register
- Local Bus Controller

These blocks function as follows.

Reset/Voltage Monitor

The Reset/Voltage Monitor circuit generates the power-up reset signal that resets the CPU board and all switching modules to a known state. It also resets the CPU and switching modules if the +24V relay power supply output voltage drops below the allowed limit.

VR1 provides a 1.2V reference. This reference voltage is applied to the inverting input of comparator U1D. Resistors R1, R2, and R5 divide the +5V supply voltage by 3.78. This voltage is applied to the non-inverting input of comparator U1D. As long as the +5V supply voltage is at least 3.78 times as high as the 1.2V reference, the output of the comparator is at logic 1, pulled up by resistor Z2D. However, if the +5V supply voltage drops to 4.53V (3.78 x 1.2V), then the comparator output will transition to logic 0.

The output of comparator U1D is inverted by U1A, and applied to the gate of transistor Q1. At power turn-on, when the +5V supply has reached the threshold for comparator U1D, Q1 is turned off, allowing capacitor C1 to begin charging. When the capacitor voltage reaches 1.2V, comparator U1B transitions to logic 1. The output of U1B is used as the power-up reset signal (HRESET\) for the CPU chip (U29).

Comparator U1C monitors the output of U1D, thus effectively monitoring the +5V supply voltage. If the supply voltage drops below the lower limit (4.53V) after power-up, the outputs of comparators U1D and U1C will both drop to logic 0. The output of U1C will then sink current from the HRESET\ signal, pulling it low. This feature is necessary because a low +5V supply voltage would not allow capacitor C1 to discharge further than a diode drop above the 1.2V reference. Therefore, comparator U1B will not respond to a low voltage condition as long as the 1.2V reference is still at its normal level. Comparator U1C provides the mechanism for a reset condition if the supply voltage drops below the limit.

The output of U1B, HRESET\, is buffered by U2B to create the non-vol enable signal (NVENB\). This signal prevents writing to the non-volatile memory while the +5V supply is below the limit. The U1B output is also buffered by comparator U2D to provide the RESET\ signal, which is widely distributed throughout the CPU board.

RESET\ is inverted by comparator U2C, and inverted again and buffered by transistor Q2. The collector of Q2 provides the BPRST\ signal, which is distributed to all of the switching modules.

Comparator U2A monitors the +24V relay supply. The 1.2V reference is applied to the inverting input, and the output of a voltage divider is applied to the non-inverting input. The voltage divider consists of resistor R8 on the CPU and a 21K-ohm resistor on the Power Supply Assembly. This voltage divider divides the +24 volt supply output by 16.8. If the supply voltage drops below 20.2V, the non-inverting input of U2A will drop below the inverting input, which has the 1.2V reference applied. The comparator output will transition to logic 0. The status of this output may be read by the CPU via the Discrete Input Register, described later.

Microprocessor

The microprocessor is a Motorola 68000 16-bit processor (32 bits internal). Its clock is provided by oscillator Y1, at a frequency of 8 MHZ. Peripheral devices are interfaced to the CPU via the data and address busses. Two bus handshaking methods are used. The first handshake method uses the standard 68000-style data transfer handshake, using the following CPU signals:

- Address Strobe (AS\)
- Read/Write (R/W)
- Upper Data Strobe (UDS)
- Lower Data Strobe (LDS)

This handshake is used for the following peripheral devices on the CPU Assembly:

- Static RAM
- Erasable Programmable Read-Only Memory (EPROM)
- GPIB Configuration Switch
- External Trigger Conditioner
- Discrete Input Register
- Discrete Output Register
- Local Bus Controller

The second handshaking method is the 6800 bus handshake, using the following CPU signals:

- Valid Memory Address (VMA)
- Valid Peripheral Address (VPA)
- Free-running clock (E)

This handshaking method is used for the following peripheral devices on the CPU Assembly:

- Non-Volatile RAM
- GPIB Interface
- DUART/Timer

Both of the above handshaking mechanisms are thoroughly documented in the *M68000 Family Reference*, by Motorola, Inc.

Address Decoder

The Address Decoder consists of U18 and U19. U19 generates the chip select signals for the Local Bus Controller (LBUSCS\), DUART/Timer (DUARTCS\), Discrete Input Register (TESTRD\), GPIB Configuration Switch (GPIBSWT\), and Discrete Output Register (CRDADD\). All of the above chip select signals are qualified with Address Strobe (AS\) from the CPU.

U19 also provides for two test pulses, SASTART and SASTOP, which are available on test points TP3 and TP4, respectively. These signals are not used during normal 1255A operations, but provide a means of generating timing reference pulses during firmware development. For example, the firmware developer may program a pulse to occur at SASTART at the

beginning of a routine, and a pulse at SASTOP at the end of the routine. A storage oscilloscope may then be used to measure the time interval between the two pulses, and thus, the execution time of the firmware routine.

U18A generates the chip select signals for the EPROM Bank 0 (PRM0CS\), EPROM Bank 1 (PRM1CS\), and the RAM (RAMCS\). These signals are not qualified by Address Strobe (AS\).

U18B generates the chip select signals for the GPIB Interface (GPIBCS\) and Non-Volatile Memory (NV_ADDR\). These signals are qualified by Valid Memory Address (VMA\), since they correspond with devices that use the 6800 bus handshake.

Interrupt Encoder

U3 is the Interrupt Encoder. It prioritizes interrupt signals from the External Trigger (EXTIRQ\), Local Bus Controller (LBUSIRQ\), GPIB Interface (GPIBIRQ\), and DUART/Timer (DUARTIRQ\). The interrupt having highest priority is encoded (converted to a 3-bit binary number) and output on signals IPL0\, IPL1\, and IPL2\. U3 assigns the highest priority to its "0" input (pin 10) and the lowest priority to its "7" input (pin 4).

Static RAM

The Static RAM is implemented with U9 and U26, each of which is a 6264. The schematic is drawn with the pin-out of a 62256 in order to include the complete pinout of the highest density device that may be installed for future expansion. Each of the 6264 devices contains 64 K-bits (8 K-bytes) of memory. Together, they provide 8 K-words of 16 bits each.

If it becomes necessary for future enhancements, the RAM capacity may be increased from 8K x 16 to 32K x 16. To upgrade the RAM:

- Remove RAMS U9 and U26 (6264 devices). Replace with new RAMs (62256).
- Cut the circuit traces that connect E7 to E8, and E16 to E17.
- Solder jumpers from E8 to E9, and E16 to E17.

Erasable Programmable Read-Only Memory (EPROM)

The EPROM, used for the operating system firmware, is comprised of U11 and U28. U10 and U27 are not installed; their positions are provided for future expansion capability.

If it becomes necessary to expand the EPROM capacity from 32K x 16 to 64K x 16, this may be accomplished as follows:

- Remove EPROMS U10 and U27 (27256 devices). Replace with new EPROMS (27512).
- Cut circuit traces that connect E21 to E20, and E24 to E23.
- Solder jumpers from E20 to E19, and from E22 to E23.

Non-Volatile RAM

The Non-Volatile RAM is comprised of a single 2816 (U24). This device provides 2 K-bytes of memory. The schematic is drawn showing the complete pin-out of a 2864, since this is the highest-capacity device that may be installed.

Should it become necessary to increase the non-volatile RAM capacity from 2K x 8 to 8K x 8, perform the following procedure:

- Remove U24 (2816) and install a 2864 in its place.
- Cut circuit trace that connects E11 to E12.
- Solder jumper from E10 to E11.

> NOTE
>
> **In order to make use of the increased non-volatile memory, the firmware must be revised so that it recognizes the higher capacity.**

GPIB Interface

The GPIB interface is implemented using a 9914 GPIB controller IC (U17). U16, a 75160 Octal GPIB Transceiver, buffers the data signals between the GPIB controller and the GPIB. U23, a 75161 Octal GPIB Transceiver, buffers the control and status signals between the GPIB controller and the GPIB.

DUART/Timer

The DUART/Timer (U32) serves two functions. It provides the UART function for the RS-232 interface, and has an internal timer used for generating real-time interrupts to the CPU for timekeeping purposes.

U33, a MAX232 RS-232 Driver/Receiver, buffers the RS-232 signals to and from the DUART. The MAX232 draws power only from +5V, and generates its own internal +12V and -12V supplies. These internal supplies power its buffers so that it can comply with the voltage requirements of the RS-232 standard.

The time reference for the DUART is crystal X1, running at 3.6864 MHZ. This frequency divides down inside the DUART to standard RS-232 baud rates.

The DUART also functions as the timing reference for the CPU. It contains a programmable down-counter that issues an interrupt (DUARTIRQ\) every 10 mS. (DUARTIRQ\ is also asserted by the DUART function during RS-232 operations.) The CPU uses this as a reference to control time-critical functions.

GPIB Configuration Switch

The GPIB Configuration Switch consists of a six-segment DIP switch (S201), six pull-up resistors (Z6A through Z6F), and a 74LS244 Octal Buffer (U4). The CPU may read the status of the six DIP switch segments

in one byte. Also contained in the same byte are the SYNCOUT and TEST\ signals (from the Discrete Output Register), which may be read for self-test purposes.

The information conveyed by the switch is explained in **Section 2: Getting Started** (see **Figure 2-4: Using the GPIB Interface** and **Figure 2-5: Using the RS-232 Interface**).

External Trigger Conditioner

The External Trigger Conditioner is comprised of U6A, B, C, E, and F, U5, Z2E, and CR2. Its function is to latch the external trigger pulses that the user applies to the SYNC/TRIG connector. U5B provides the latching function, and outputs an interrupt (EXTIRQ\) to the CPU. After servicing the interrupt, the CPU will reset the trigger latch (U5B) by writing to the Discrete Output Register to take the TEST\ signal to a logic 0.

Discrete Input Register

The Discrete Input Register consists of U20, which is a 74LS244 Octal Buffer. Through this buffer, the CPU may read the status of the TEST\ , PWR_TYP, and VRELAYOK signals.

The TEST\ signal is controlled by the CPU by writing to the Discrete Output Register. During self test, the CPU takes TEST\ to a logic 0 and reads its status back through the Discrete Input Register. This provides a high level of confidence that the two registers are being correctly accessed.

The PWR_TYP signal comes from the Power Supply Assembly. Its state, logic 1 or 0, is determined by a jumper on the Power Supply Assembly. A logic 1 indicates that the power supply type is +5V/+24V, which is for the 1255 Switch System. A logic 0 indicates a +5V/+24V/+12V power supply type, which is for the 1255A Enhanced Switch System.

The VRELAYOK signal is the output of comparator U2A. This signal is at a logic 1 if the +24V relay power is above the minimum threshold. A logic 0 level indicates that the +24V supply voltage is below the limit (see Reset/Voltage Monitor subsection, above, for a discussion of the +24V monitoring circuitry).

Discrete Output Register

The Discrete Output Register contains eight bits. Each bit controls the logic level of one signal. These signals, and their definitions, are:

- SYNCOUT. This signal is buffered by U6D and available at the SYNC/TRIG connector of the CPU Assembly. This signal provides the sync pulse used for synchronizing external equipment with the closure of switch module relays.

- TEST\. The CPU uses this signal during self test. It takes TEST\ to logic 0 and reads its status back through the Discrete Input Register and the GPIB Configuration Register (the register used to
read the status of the GPIB Configuration Switches). It then takes TEST\ to logic 1 and then re-verifies its status through the other registers.

- ADDLED. This signal controls the ADDR LED on the 1255A front panel. This LED, like all LEDs in the 1255A, resides on the Backplane Assembly.

- FAILLED. This signal controls the FAIL LED on the 1255A front panel.

- OPRLED. This signal controls the OPR (operate) LED on the 1255A front panel.

- SPARE1, SPARE2, and SPARE3. These signals are routed to the backplane, but are not currently used.

Local Bus Controller

The Local Bus Controller handles all exchanges of data between the CPU and switching modules. The Local Bus uses the same bus signals as the 1260-Series Option-01 VXI Local Bus, and the same serial data handshake. The bus signals are:

- *CLK+*, *CLK-*. This differential pair provides the timing reference for the switching modules, allowing them to shift the address and data in.

- *DATA+*, *DATA-*. This differential pair carries the serial data, consisting of a 13-bit address followed by eight bits of data.

- *A/D+*, *A/D-*. This differential pair distinguishes the type of information being transmitted by the DATA+ and DATA- signals. If A/D+ is high and A/D- is low, then the DATA+ and DATA- signals are carrying an address. Otherwise, they are carrying data.

- *R/W+*, *R/W-*. This differential pair distinguishes between read mode (data coming from a switching module) and write mode (data going out from Local Bus Controller). When R/W+ is high and R/W- is low, data is being read from a switching module.

- *STROBE+*, *STROBE-*. This differential pair signals the completion of eight bits of data being written to the switching module. The composite signal (STROBE+ minus STROBE-) goes high for one clock cycle (125 uS) at the completion of data being written.

- *LBUSIRQ*. This single-ended signal from the switch modules goes to logic 0 when any switch module asserts an interrupt to the CPU Assembly.

- *BPRST*.* This single-ended signal resets all switch modules to a known state by going to logic 0. This occurs briefly during power-up.

Information transfer over the Local Bus is accomplished as follows.

In Write Mode, the CPU writes the data to U36, an 8-bit shift register. As this data is latched into U36, the least-significant 13 bits of the address are latched into U34 and U35, which form a 16-bit shift register (only 13 bits are actually used).

U7 senses the write operation through the LBUSCS (Local Bus chip select) signal. It then controls the address (U34 & U35) and data (U36) shift registers to send the address and data to the switching modules. It should be noted that the DTACK signal to the CPU will not be asserted until the data transfer with the switch modules has been completed.

The 13-bit address is shifted out serially to the switching modules (most-significant bit first). All of the switch modules receive this address and compare it with their own (each switching module has its own unique address, set by DIP switches). The module whose address matches the received address prepares itself to receive the data that will follow.

After the 13 address bits have been sent, the Local Bus Controller shifts out the eight data bits (most-significant bit first). The addressed switch module shifts this data in. At the conclusion of the data transfer, the Local Bus Controller sends a STROBE pulse, which is used by the switching module to latch the data from its shift register into its data register. U7 then asserts the DTACK signal, allowing the CPU to proceed with other operations.

The Read Mode works in a similar manner. The Local Bus Controller starts by shifting out the 13-bit address to the switch modules. It then shifts in eight data bits from the addressed module. When all eight bits have been shifted in, U7 asserts the DTACK signal, causing the CPU to latch the data from shift register U36.

Appendix C

Installing The Optional Slide Mount Kit

Refer to the following figures for instructions on installing the Option 65 Slide Mount Kit:

- Figure C-1: Slide-Mount Kit Components
- Figure C-2: Assembling The Slide Mount
- Figure C-3: Adjusting The Slide Mount
- Figure C-4: Rear End Slide-Mount Rack Dimensions
- Figure C-5: Front-Forward Rack Mounting
- Figure C-6: Rear-Forward (Flush) Rack Mounting
- Figure C-7: Rear-Forward (Recessed) Rack Mounting

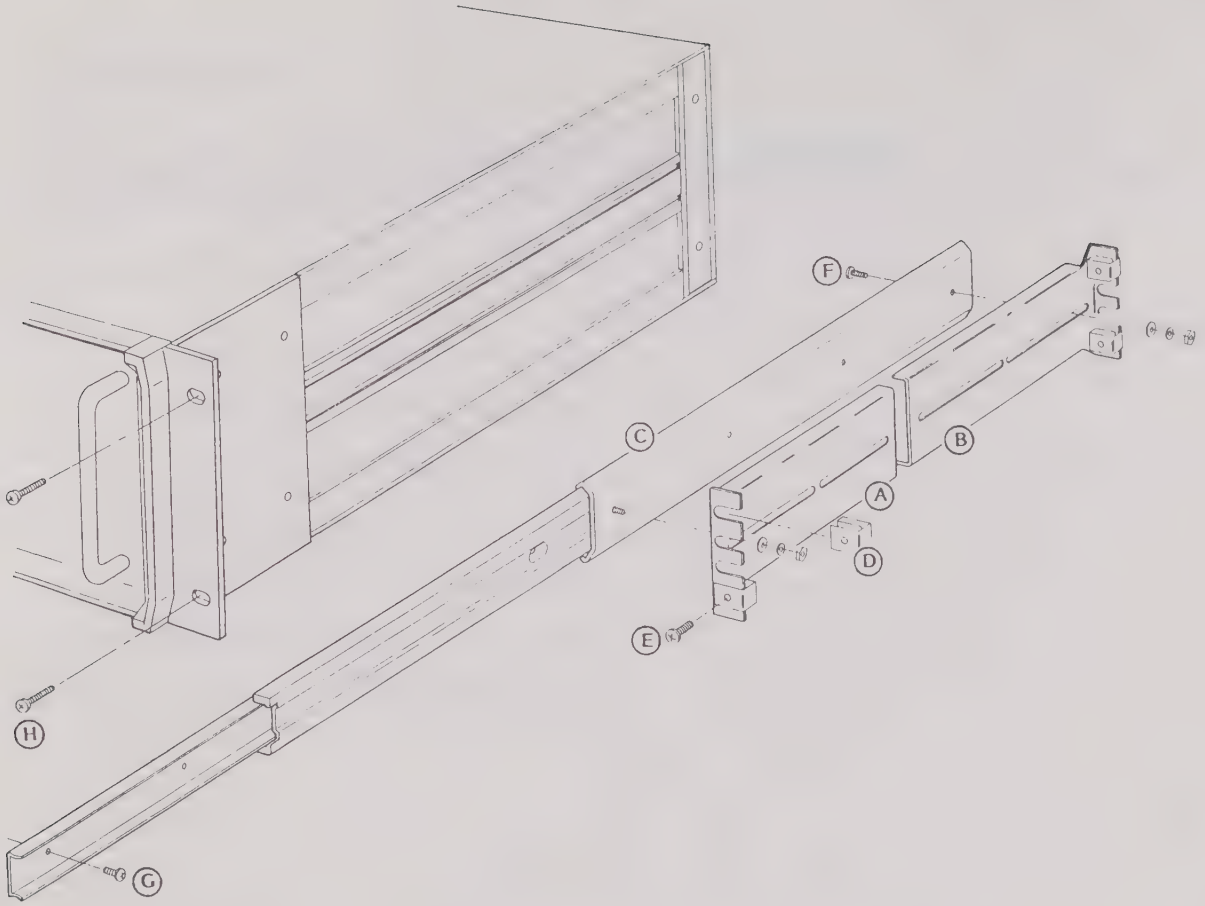

The Model 1255A Option 65 Slide/Rack Mount Kit (P/N 407404) includes

ITEM	DESCRIPTION	QTY	PART NUMBER
A	Front rack bracket	2	part of P/N 454488
B	Rear rack bracket	2	part of P/N 454488
C	Triple-rail slide-mount assembly	2	454489
D	Self-anchoring #10-32 tinnerman nuts	12	610920
E	Phillips panhead #10-32 x ½ screw	8	615091
F	Slotted panhead #8-32 x 3/8 screw, nut, flat washer, and lock washer	8 each	part of P/N 454488
G	Phillips panhead self-tapping #8-32 x 5/16 screw	4	610910
H	Phillips panhead #10-32 x 3/4 screw	4	615093

Figure C-1 Slide-Mount Kit Components

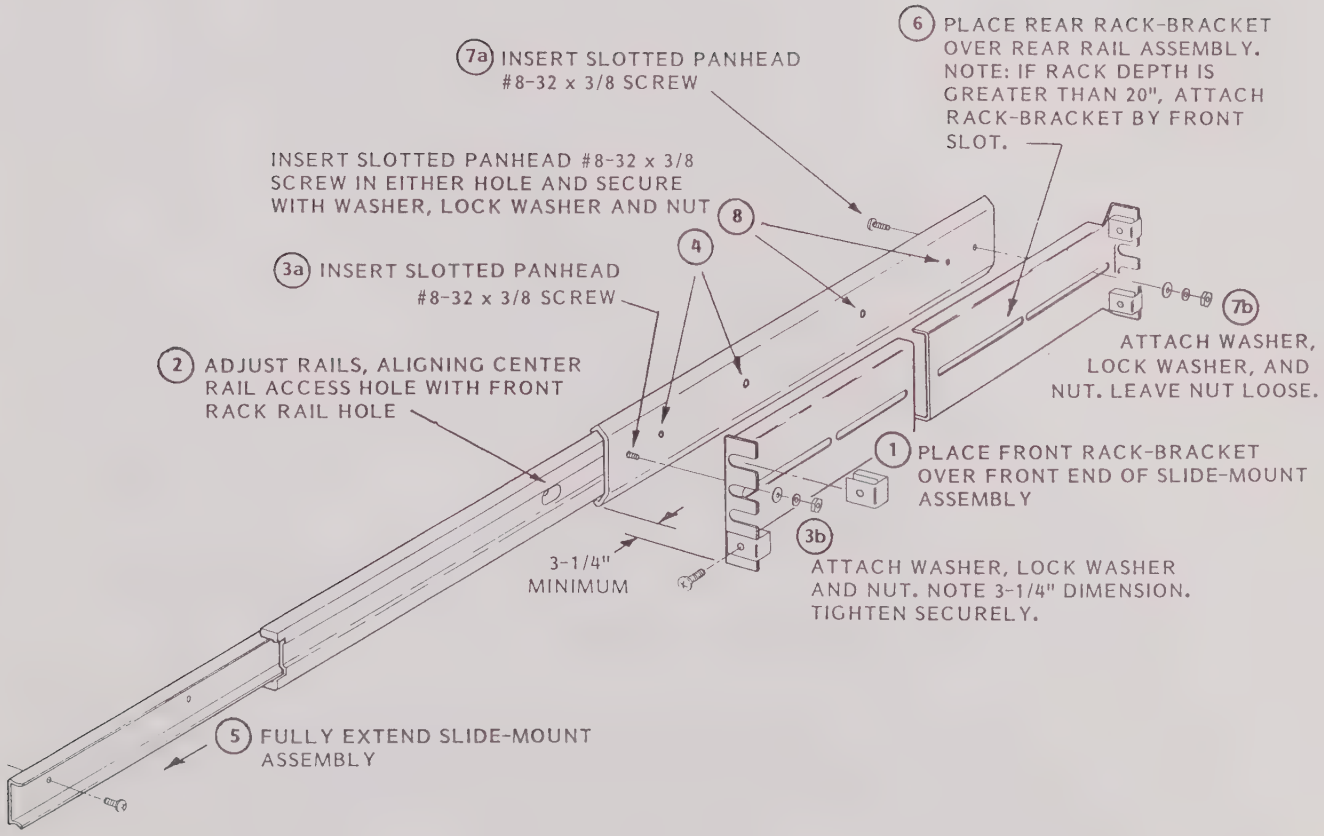

Figure C-2 Assembling The Slide Mount

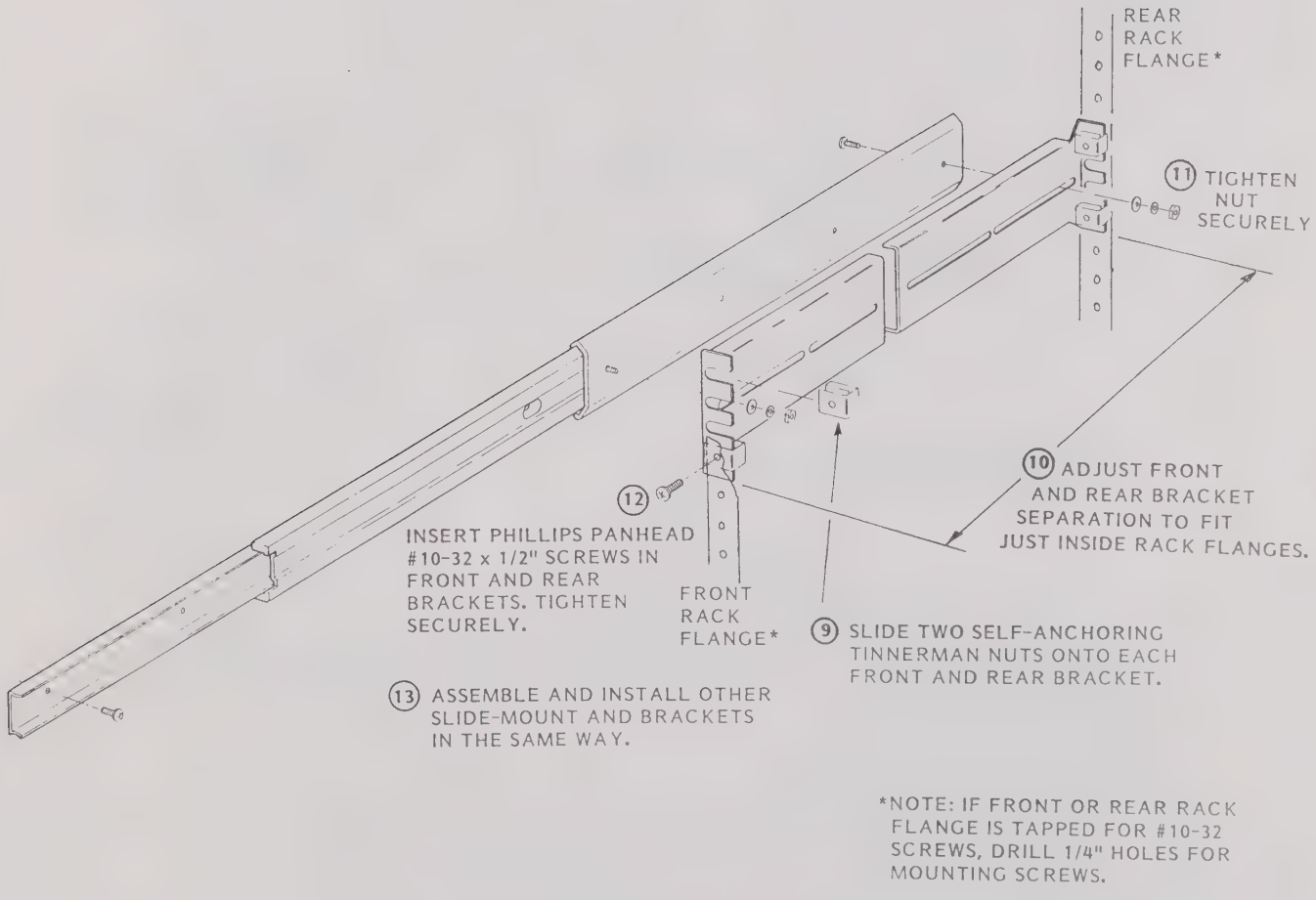

Figure C-3 Adjusting The Slide Mount

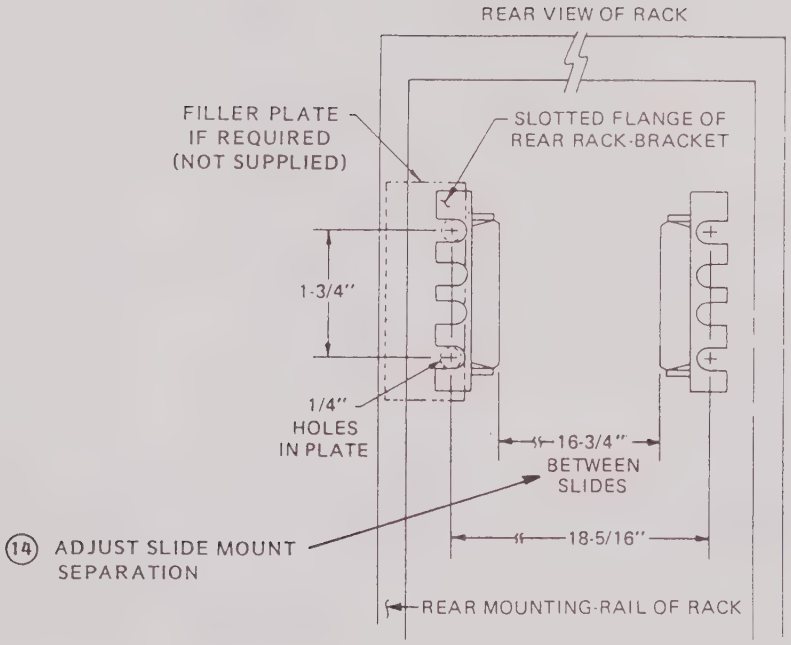

NOTE:
FOR FRONT-FORWARD RACK MOUNTING, SEE FIGURE C-5.
FOR REAR-FORWARD (FLUSH) RACK MOUNTING, SEE FIGURE C-6.
FOR REAR-FORWARD (RECESSED) RACK MOUNTING, SEE FIGURE C-7.

Figure C-4 Rear End Slide-Mount Rack Dimensions

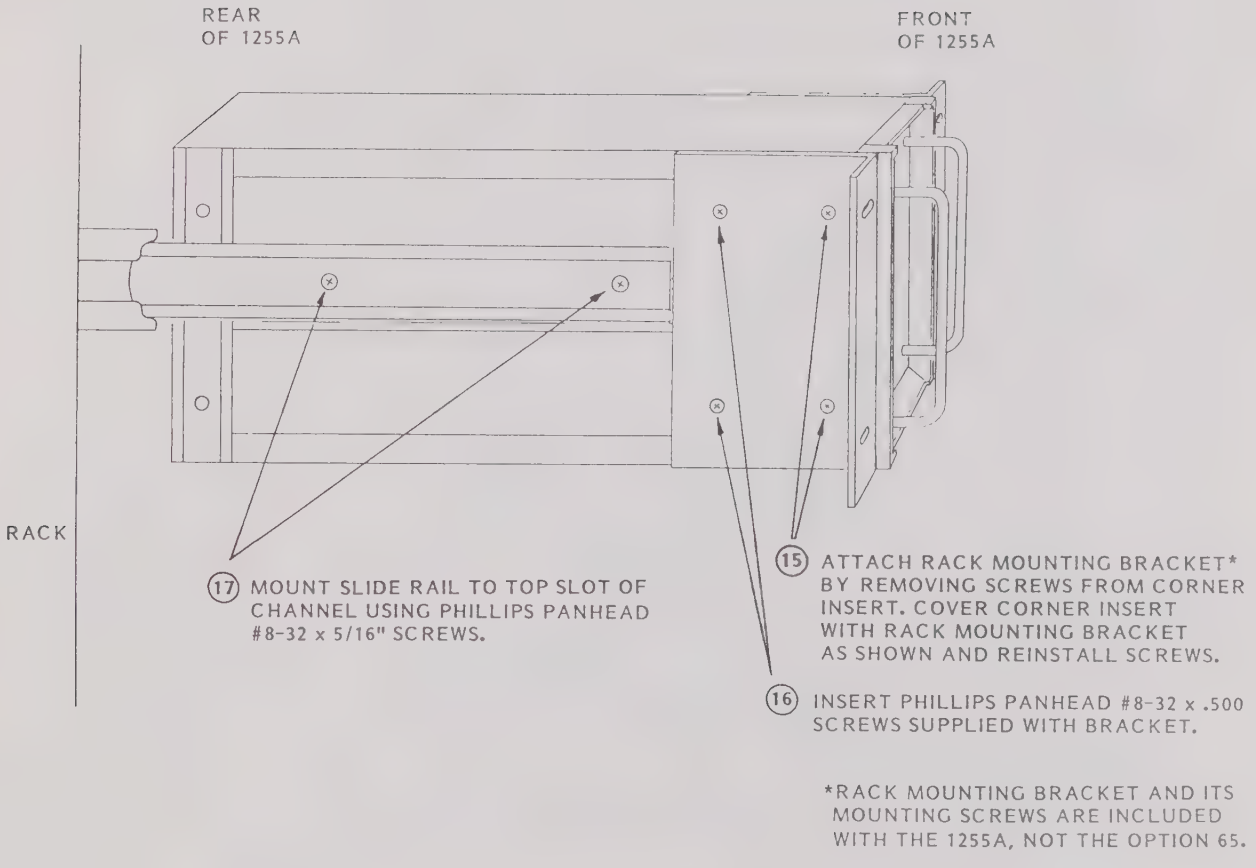

Figure C-5 Front-Forward Rack Mounting

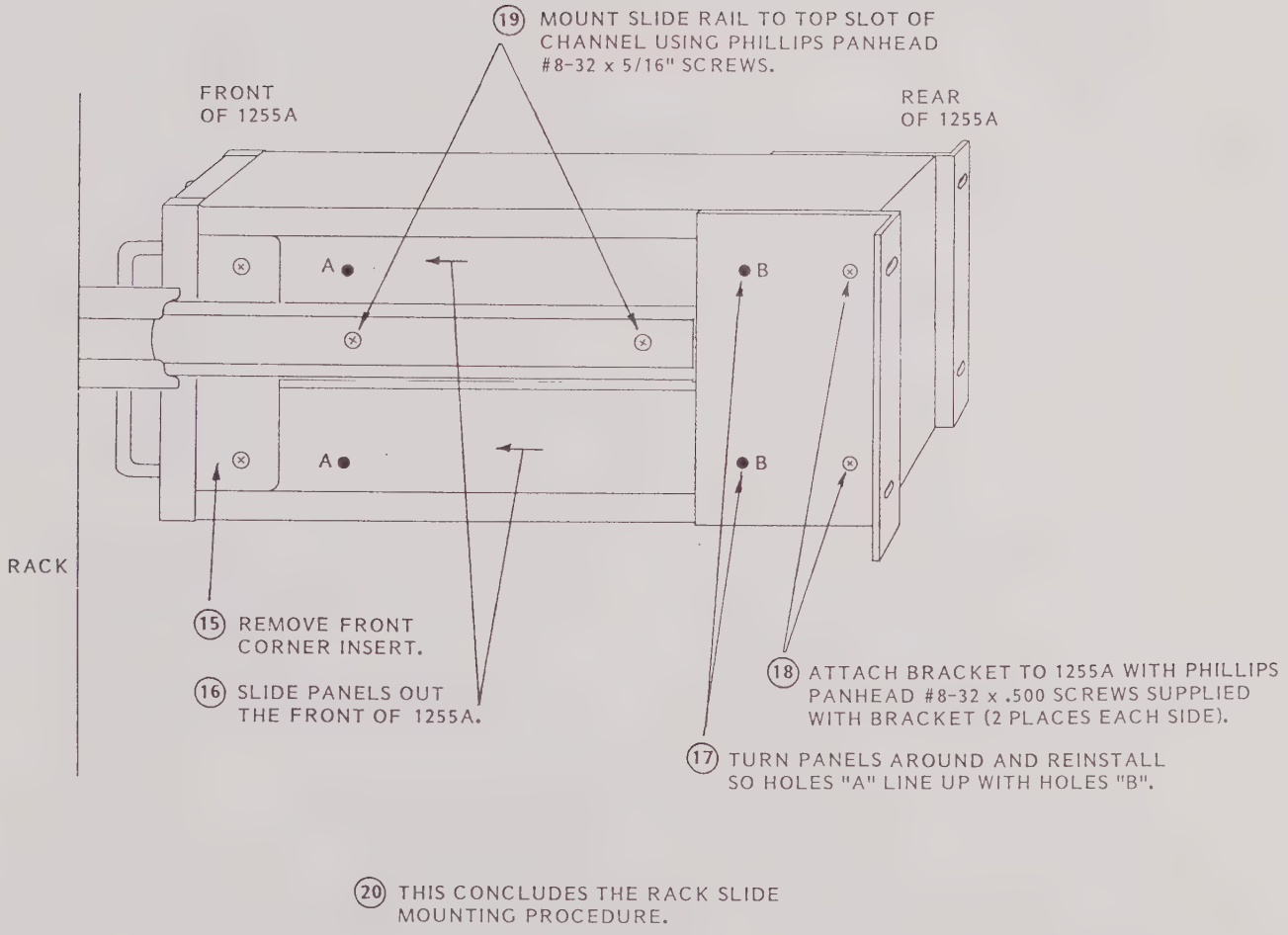

Figure C-6 Rear-Forward (Flush) Rack Mounting

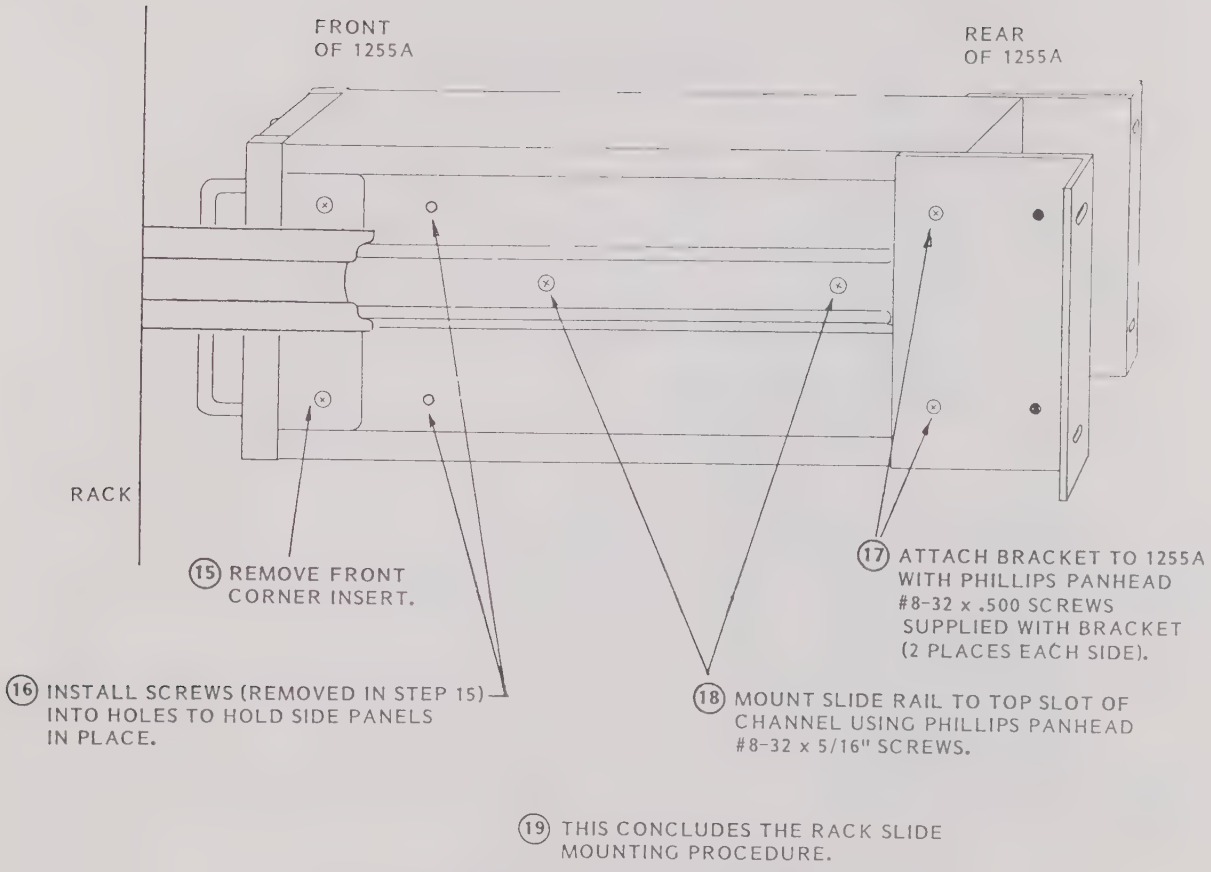

Figure C-7 Rear-Forward (Recessed) Rack Mounting

Appendix D

Troubleshooting

If you have difficulty in using the 1255A Enhanced Switch System, refer to the following troubleshooting table. If you are still unable to resolve the problem, contact Racal's Customer Support Department (refer to **Section 7: Customer Support**).

PROBLEM	POSSIBLE CAUSES	WHAT TO DO
"ON" indicator does not come on	• 1255A chassis not connected to power source.	• Make sure that the 1255A is connected to a live electrical outlet. Try operating another piece of equipment from this outlet.
	• Fuse blown	• Make sure proper fuse is installed (see "Main AC Power" in **Section 2: Getting Started**).
	• Power Switches not both switched on.	• Set both front- and rear-panel power switches to ON position (see "Activating Main AC Power" in **Section 3: Using the Chassis**).
	• Power activation switch on front panel is not switched on.	• Set power activation switch to ON position (see **Section 3: Using the Chassis**).
FAIL indicator stays on after self test has completed.	• Faulty switch module	• Remove switch modules, one at a time. Repeat self test after removing each one.
	• Defective 1255A CPU or power supply	• Contact Racal Instruments Customer Support (see **Section 7: Customer Support**).

PROBLEM	POSSIBLE CAUSES	WHAT TO DO
No response from 1255A in GPIB mode.	• DIP switch at rear of 1255A set improperly. • Host computer not set up properly. • Faulty GPIB cable	• Review "Connecting the GPIB Interface" in **Section 2: Getting Started** • Review instruction manual for your GPIB interface. Make sure address setting matches address set by DIP switches on 1255A. • Try a different GPIB cable.
No response from 1255A in RS-232 mode.	• DIP switch at rear of 1255A not set properly. • Host computer's RS-232 interface not configured properly. • Host computer and 1255A are both Data Terminal Equipment (DTE) or both Data Communications Equipment (DCE).	• Review "Connecting the RS-232 Interface" in **Section 2: Getting Started**. Make sure RS-232 mode is selected and baud rate is correct. • Check serial port setup. Make sure baud rate matches baud rate set on 1255A. If using flow control, make sure it is "hardware" (RTS/CTS) and not "software" (XON/XOFF). • Try changing the 1255A mode from DTE to DCE or vice-versa, or insert a null modem between 1255A and host computer. See "Connecting the RS-232 Interface" in **Section 2: Getting Started**.

PROBLEM	POSSIBLE CAUSES	WHAT TO DO
Garbled data from 1255A in RS-232 mode.	• Incorrect baud rate.	• Verify that host computer's baud rate matches baud rate set by 1255A rear panel DIP switch. See "Connecting the RS-232 Interface" in **Section 2: Getting Started**.
	• Faulty RS-232 cable.	• Try a different RS-232 cable.
As a command is sent to the 1255A from the controller, some characters are not echoed back (with echo-back enabled).	• Characters are sent too quickly for proper echo-back.	• Do not use echo back feature when controlling the 1255A from a high-speed source such as a computer program.
In RS-232 mode, data from 1255A is displayed on terminal screen, but commands entered from terminal are not.	• Echo-back function not enabled.	• Enable Echo-Back function. See "Setting the Echo-Back Option" in **Section 2: Getting Started**. • If echo-back is not desired, enable the "Local Echo" function of your terminal. See your terminal manual.
1255A does not recognize long commands or: data from 1255A has characters missing	• Flow control is not enabled properly	See "Setting the Flow Control Method" in **Section 2: Getting Started**, and check the following: • If using hardware flow control, check cabling, 1255A DIP switch setting, and controller setup. • If using software flow control, check 1255A DIP switch setting and controller setup. • If your controller does not support flow control, use a slower baud rate.

PROBLEM	POSSIBLE CAUSES	WHAT TO DO
Switch module does not appear in VXI*plug&play* soft panel list.	• Switch module address not valid.	• Verify that the switch module address is a number from 1 to 12, inclusive. See "Switch Module Configuration Switches" in **Section 2: Getting Started**.
	• Switch module address not unique.	• Check address settings of all installed switch modules. No two may be set to the same address.
	• One or more switch modules is equipped with a 1260 Option-01 Smart Card.	• Check all installed switch modules for the presence of a 1260 Option-01 Smart Card. Remove Smart Card if found. Contact Racal Instruments Customer Service for instructions on removing the Smart Card.
Fatal error reported in response to `YERR` command (see **Section 5: Error Messages** for a list of fatal errors).	• Faulty switch module.	• Remove switch modules, one at a time. Repeat self test after removing each one (see "Switch System Self Test" in **Section 2: Getting Started**).
	• Defective 1255A CPU or power supply.	• Contact Racal Instruments Customer Support (see **Section 7: Customer Support**).

Appendix E

Modules

Every 1260 Series switch module comes with an information packet providing technical information that is specific to that module. Insert these packets after this page so that they become part of this instruction manual.

1260 VXI
SWITCHING CARD

1260-20
POWER MODULE

PUBLICATION NO. 980673-004

RACAL INSTRUMENTS

Racal Instruments, Inc.
4 Goodyear St., Irvine, CA 92718-2002
Tel: (800) RACAL-ATE, (949) 859- 8999, FAX: (949) 859-7309

Racal Instruments, Ltd.
480 Bath Road, Slough, Berkshire, SL1 6BE, United Kingdom
Tel: +44 (0) 1628 604455; FAX: +44 (0) 1628 662017

Racal Systems Electronique s.a.
18 Avenue Dutartre, 78150 LeChesnay, France
Tel: +33 (1) 3923 2222; FAX: +33 (1) 3923 2325

Racal Systems Elettronica Srl.
Strada 2-Palazzo C4, 20090 Milanofiori Assago, Milan, Italy
Tel: +39 (02) 5750 1796; FAX +39 (02) 5750 1828

Racal Elektronik System GmbH.
Frankenforster Strasse 21, 51427 Bergisch-Gladbach 1, Germany
Tel:+49 2204 92220; FAX: +49 2204 21491

Racal Australia Pty. Ltd.
3 Powells Road, Brookvale, NSW 2100, Australia
Tel: +61 (2) 9936 7000, FAX: +61 (2) 9936 7036

Racal Electronics Pte. Ltd.
26 Ayer Rajah Crescent, 04-06/07 Ayer Rajah Industrial Estate, Singapore 0513.
Tel: +65 7792200, FAX: +65 7785400

Racal Instruments, Ltd.
Room 1213 Nan Fung Centre, Tsuen Wan, New Territories, Hong Kong
Tel: +852 2405 5500, FAX: +852 2416 4335

http://www.racalinst.com

RACAL

PUBLICATION DATE: MAY 1996

Copyright 1996 by Racal Instruments, Inc. Printed in the United States of America. All rights reserved.
This book or parts thereof may not be reproduced in any form without written permission of the publisher.

WARRANTY STATEMENT

Products sold by Racal Instruments, Inc. are warranted to be free from defects in workmanship or materials. Racal Instruments, Inc. will, at its option, either repair or replace any hardware products which prove to be defective during the warranty period. You are a valued customer. Our mission is to make any necessary repairs in a reliable and timely manner.

Duration of Warranty

The warranty period for this Racal Instruments, Inc. hardware is three years, except software and firmware products designed for use with Racal Instruments, Inc. Hardware are warranted not to fail to execute their programming instructions due to defect in materials or workmanship for a period of ninety (90) days from the date of delivery to the initial end user.

Return of Product

Authorization is required from Racal Instruments before you send us your product for service or calibration. Call your nearest Racal Instruments support facility. A list is located on the last page of this manual. If you are unsure where to call, contact Racal Instruments, Inc. Customer Support Department in Irvine, California, USA at 1-800-722-3262 or 1-949-859-8999 or via fax at 1-949-859-7309.

Limitation of Warranty

Racal Instruments, Inc. shall be released from all obligations under this warranty in the event repairs or modifications are made by persons other than authorized Racal Instruments service personnel or without the written consent of Racal Instruments.

Racal Instruments, Inc. expressly disclaims any liability to its customers, dealers and representatives and to users of its product, and to any other person or persons, for special or consequential damages of any kind and from any cause whatsoever arising out of or in any way connected with the manufacture, sale, handling, repair, maintenance, replacement or use of said products.

Representations and warranties made by any person including dealers and representatives of Racal Instruments, Inc., which are inconsistent or in conflict with the terms of this warranty (including but not limited to the limitations of the liability of Racal Instruments, Inc. as set forth above), shall not be binding upon Racal Instruments, Inc. unless reduced to writing and approved by an officer of Racal Instruments, Inc.

Except as stated above, Racal Instruments, Inc. makes no warranty, express or implied (either in fact or by operation of law), statutory or otherwise; and except to the extent stated above, Racal Instruments, Inc. shall have no liability under any warranty, express or implied (either in fact or by operation of law), statutory or otherwise.

PROPRIETARY NOTICE

This document and the technical data herein disclosed, are proprietary to Racal Instruments, and shall not, without express written permission of Racal Instruments, be used, in whole or in part to solicit quotations from a competitive source or used for manufacture by anyone other than Racal Instruments. The information herein has been developed at private expense, and may only be used for operation and maintenance reference purposes or for purposes of engineering evaluation and incorporation into technical specifications and other documents which specify procurement of products from Racal Instruments.

FOR YOUR SAFETY

Before undertaking any troubleshooting, maintenance or exploratory procedure, read carefully the **WARNING** and **CAUTION** notices.

This equipment contains voltage hazardous to human life and safety, and is capable of inflicting personal injury.

If this instrument is to be powered from the AC line (mains) through an autotransformer, ensure the common connector is connected to the neutral (earthed pole) of the power supply.

Before operating the unit, ensure the conductor (green wire) is connected to the ground (earth) conductor of the power outlet. Do not use a two-conductor extension cord or a three-prong/two-prong adaptor. This will defeat the protective feature of the third conductor in the power cord.

Maintenance and calibration procedures sometimes call for operation of the unit with power applied and protective covers removed. Read the procedures and heed warnings to avoid "live" circuit points.

Before operating this instrument:

1. Ensure the instrument is configured to operate on the voltage at the power source. See Installation Section.

2. Ensure the proper fuse is in place for the power source to operate.

3. Ensure all other devices connected to or in proximity to this instrument are properly grounded or connected to the protective third-wire earth ground.

If the instrument:

- fails to operate satisfactorily
- shows visible damage
- has been stored under unfavorable conditions
- has sustained stress

Do not operate until performance is checked by qualified personnel.

Racal Instruments

EC Declaration of Conformity

We

Racal Instruments Inc.
4 Goodyear Street
Irvine, CA 92718

declare under sole responsibility that the

1260-20 Power Module, P/N 404773

conform to the following Product Specifications:

Safety: EN 61010-1

EMC: CISPR 11:1990/EN 55011 (1991): Group 1 Class A
IEC 801-2:1991/EN 50082-1 (1992): 4 kV CD, 8 kV AD
IEC 801-3:1984/EN 50082-1 (1992): 3 V/m, 27-500 MHz
IEC 801-4:1988/EN 50082-1 (1992): 1 kV

Supplementary Information:

The above specifications are met when the product is installed in a Racal Instruments certified mainframe with faceplates installed over all unused slots, as applicable.

The product herewith complies with the requirements of the Low Voltage Directive 73/23/EEC and the EMC Directive 89/336/EEC.

Irvine, CA, January 24, 1996

Quality Manager

NOTE FOR SYSTEMS WITH 1260-OPT 01T

The "Module-Specific Syntax" section of this manual shows the command syntax for the 1260-01S Smart Card. If you are using the newer 1260-01T Smart Card, the commands will NOT work as shown.

Consult the 1260-01T Manual for a description of the commands which may be used with the 1260-01T Smart Card.

The channel numbers described in this manual are valid for the 1260-01T. The channel numbers continue to be used for the 1260-01T.

The syntax of the commands which use channel numbers has changed for those cards controlled by the 1260-01T.

The new syntax used to close a channel is:

CLOSE (@ <module address> (<channel>))

For example, with for a relay module whose <module address> is set to 7, closing <channel> 0 is performed with the command:

CLOSE (@ 7 (0))

Using the older 1260-01S, the command would be (as shown in this manual):

CLOSE 7.0

Many other command syntax differences exist. Please consult chapter 2 of the 1260-01T manual for a description of the commands which are available for the 1260-01T.

Control Information for the 1260-20

The following information describes the control-register-to-relay-channel mapping for a 1260-20 Relay Module. This information may be used to control a 1260-20 when using a 1260-01T in the register-based mode of operation.

Each relay on this module is controlled by setting or clearing a single bit within a Control Register. Control Registers on the module operate 8 channels simultaneously. There are eight control bits per Control Register. Setting the bit to a 1 closes the relay; setting the bit to a 0 opens the relay.

The table below shows the mapping from logical channels to control bits. The logical channels are used when operating the relay module in message-based mode. The control bits within the Control Registers are used to operate the module in register-based mode.

Each Control Register is located 2 addresses from the previous Control Register. That is, each Control Register is located at an odd address. This is shown in Table 2-2 of the 1260-01T manual. Control Register 0 is located at the "Base A24 Address" for the module. Consult the "Register-Based Operation" Section of Chapter 2 of the 1260-01T manual for a description of calculating control register addresses

Channel	Control Register	Control Bit
0	0	0
1	0	1
2	0	2
3	0	3
4	0	4
5	0	5
6	0	6
7	0	7
8	1	0
9	1	1
10	1	2
11	1	3
12	1	4
13	1	5
14	1	6
15	1	7
16	2	0
17	2	1
18	2	2
19	2	3

TABLE OF CONTENTS

1260-20 POWER MODULE

1.0	1260-20 Module Specification	1-1
2.0	Installation Instructions	2-1
2.1	Unpacking and Inspection	2-1
2.2	Reshipment Instructions	2-1
2.3	Option 01 Installation	2-1
2.4	Module Installation	2-1
3.0	1260-20 Module Specific Syntax	3-1
3.1	Syntax	3-1
4.0	Drawings	4-1
5.0	Parts List	5-1
6.0	Optional Harness Assemblies	6-1

FIGURES

1-1	1260-20 Relay Diagram	1-1
3-1	1260-20 Pin Connections	3-2

1.0 1260-20 Module Specification

The 1260-20 Power Module is a 20-Channel Double-pole, Single-throw power switching module.

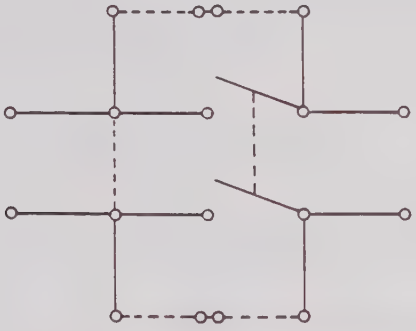

Model 1260-20. Twenty independent relays. One channel is shown, with provision for addition of series and shunt elements.

Figure 1-1, 1260-20 Relay Diagram

Specifications

Switch Configuration	20 DPST Relays
User Connector	Positronics GMCT41FOE100JC
Maximum Switchable Voltage	250 VDC or 380 VAC pk
Maximum Switchable Current (DC or AC RMS) Per Channel	8 A
Maximum Switchable Power Per Terminal	150 W DC, 2000 VA

DC Performance

Path Resistance	150 mΩ at 5A DC 50 mΩ Typical
Isolation (High-Low)	$> 10^9\Omega$

AC Performance

Capacitance	
Open Channel	<20 pF
Channel-Chassis	<20 pF
Hi-Lo	<50 pF
Bandwidth (-3 dB, 50Ω Termination)	30 MHz (typical)
Insertion Loss (50Ω Termination)	<0.10 dB at 100 kHz <0.10 dB at 1 MHz <1.5 dB at 10 MHz
Crosstalk, (50Ω Termination)	<-60 dB at 100 kHz <-40 dB at 1 MHz <-20 dB at 10 MHz

Cooling Requirements

Airflow	4 litres/sec
Backpressure	0.5 mm H_2O

Power Requirements (I_{Pm})

+5 V	0.4A (2.8A with Option 01)
+24 V	10 mA per relay
Weight	1.15 Kg (2.56 lbs) without Option 01 (Smart Card) 1.28 Kg (2.84 lbs) with Option 01 (Smart Card)
Minimum Option 01 Firmware Revision	17.1

2.0 Installation Instructions

2.1 Unpacking and Inspection

1. Before unpacking the switching module, check the exterior of the shipping carton for any signs of damage. All irregularities should be noted on the shipping bill.

2. Remove the instrument from its carton, preserving the factory packaging as much as possible.

3. Inspect the switching module for any defect or damage. Immediately notify the carrier if any damage is apparent.

4. Have a qualified person check the instrument for safety before use.

2.2 Reshipment Instructions

1. Use the original packing material when returning the switching module to Racal Instruments for calibration or servicing. The original shipping carton and the instrument's plastic foam will provide the necessary support for safe reshipment.

2. If the original packing material is unavailable, wrap the switching module in plastic sheeting and use plastic spray foam to surround and protect the instrument.

3. Reship in either the original or a new shipping carton.

2.3 Option 01 Installation

Installation of the Option 01 into the 1260-20 is described in the Installation section of the 1260 Series VXI Switching Cards Manual.

2.4 Module Installation

Installation of the 1260-20 Switching Module into a VXI mainframe, including the setting of DIP switches, is described in the Installation section of the 1260 Series VXI Switching Cards Manual. The ID byte DIP switches, SW1-5 and SW1-6, should be set OFF.

3.0 1260-20 Module Specific Syntax

The Module Specific Syntax for the 1260-20 is required in the use of the OPEN and CLOSE commands. It will also appear in data output by the 1260 Master in response to the PDATAOUT and PSETUP commands.

3.1 Syntax

The Module Specific Syntax for the 1260-20 Power Switching module is as follows:

<module address>.<switchnumber>

where <module address> is the switch card address.

<switchnumber> is the reference number of the relay to be closed, value 0 - 19.

NOTE

The <module address> used here is <u>not</u> the VXIbus defined logical address of the 1260 Master. It is peculiar to the 1260 Series, and describes the switching module in relation to the Master. This address corresponds to the binary value of the switch setting of SW1 on the switching module PCB.

The 1260-20 pin connections made by each <switchnumber> are as follows:

J200

<switchnumber>	Pin Connections	
0	A to D,	C to K
1	J to L,	E to H
2	M to N,	B to F
3	P to T,	S to Y
4	U to W,	X to e
5	V to a,	R to Z
6	b to j,	c to d
7	m to v,	n to h
8	p to r,	f to k
9	x to s,	t to u

J201

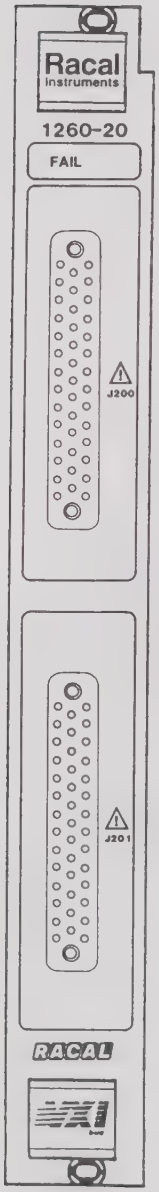

<switchnumber>	Pin Connections	
10	A to D,	C to K
11	J to L,	E to H
12	M to N,	B to F
13	P to T,	S to Y
14	W to X	U to e
15	V to a,	R to Z
16	b to j,	c to d
17	m to v,	n to h
18	p to r,	f to k
19	x to s,	t to u

Refer to Figure 3-1 for the pin configurations of connectors J200 and J201.

Figure 3-1 , 1260-20 Pin Connections

The Racal Instruments part number for the mating connectors for 1260-20 connectors J200 and J201 is 601850, and the contacts required for the mating connector are Racal Instruments Part Number 601849. 41 contacts are required to fully populate each mating connector.

4.0 Drawings

404773	Final Assembly, 1260-20	4-2
401919	PCB Assembly, 1260-20	4-3
431919	Schematic, 1260-20	4-4

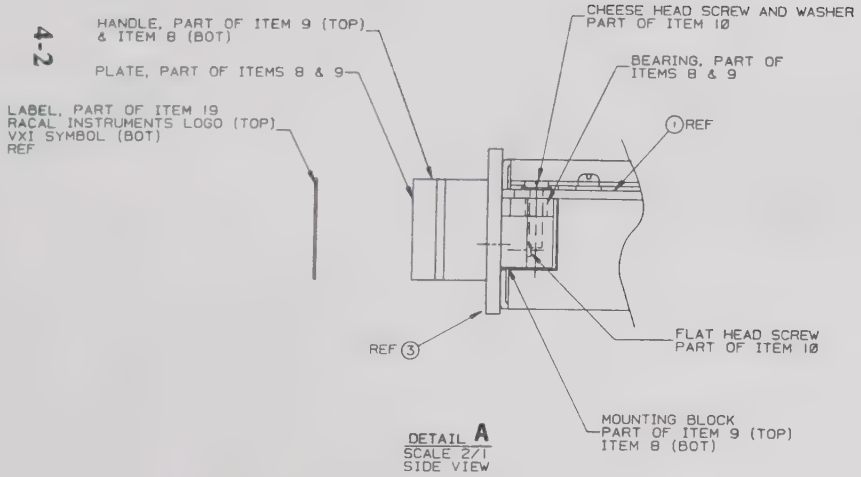

DETAIL **A**
SCALE 2/1
SIDE VIEW

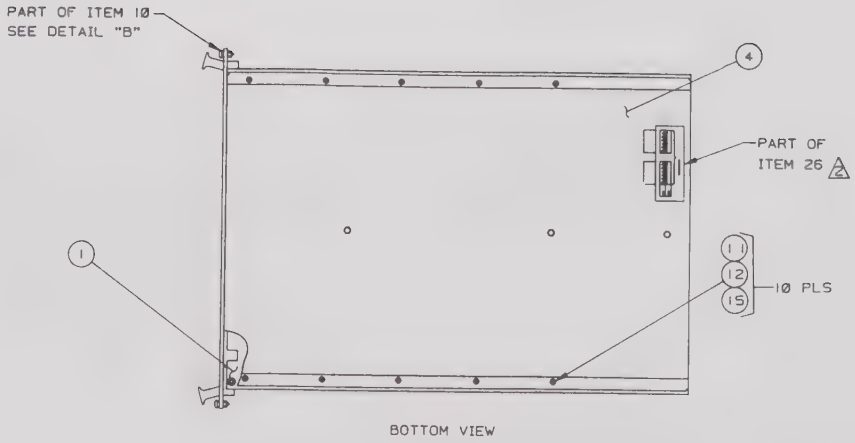

BOTTOM VIEW

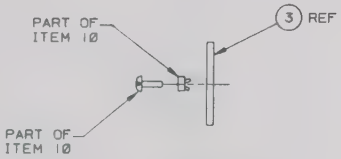

DETAIL **B**
SCALE 2/1
"SIDE VIEW"

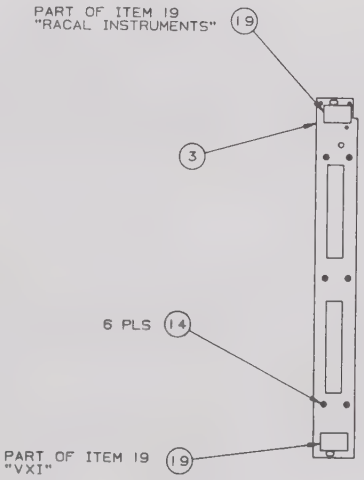

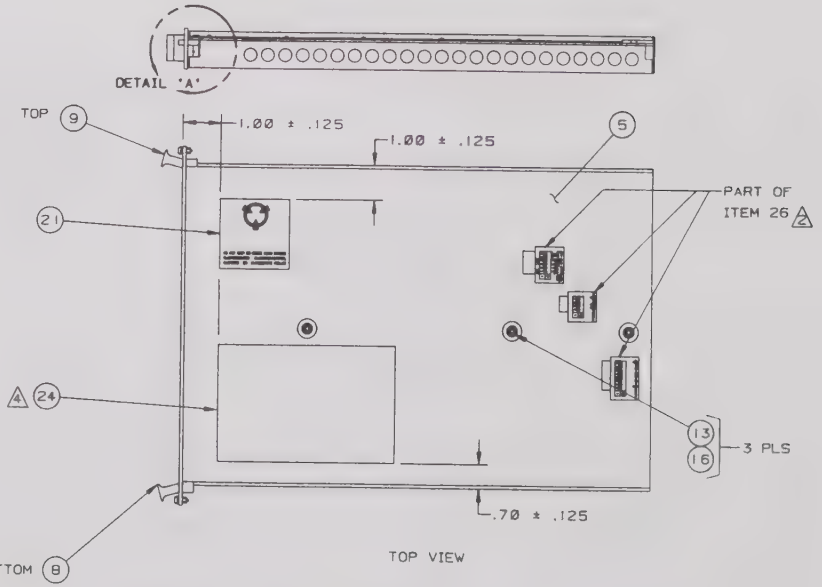

TOP VIEW

⚠4 TYPE PERTINENT INFORMATION ON LABEL ITEM 24 PRIOR TO AFFIXING LABEL TO PANEL.

3. INCLUDE SHIPPING KIT, ITEM 2 IN BOX WITH ASSY.

⚠2 AFFIX LABELS AS SHOWN, ALIGN LABEL TEXT WITH APPROPRIATE SWITCH ACTUATORS.

1. DISCARD UNUSED HARDWARE IN ITEM 10.

PROPRIETARY NOTICE

THIS DOCUMENT AND THE TECHNICAL DATA HEREIN DISCLOSED ARE PROPRIETARY TO RACAL INSTRUMENTS INC AND SHALL NOT, WITHOUT THE EXPRESS WRITTEN PERMISSION OF RACAL INSTRUMENTS INC. BE USED, RELEASED OR DISCLOSED IN WHOLE OR IN PART, OR USED TO SOLICIT QUOTATIONS FROM A COMPETITIVE SOURCE OR USED FOR MANUFACTURE BY ANYONE OTHER THAN RACAL INSTRUMENTS INC. THE INFORMATION HEREON HAS BEEN DEVELOPED AT PRIVATE EXPENSE, AND MAY ONLY BE USED FOR PURPOSES OF ENGINEERING EVALUATION AND FOR INCORPORATION INTO TECHNICAL SPECIFICATIONS AND OTHER DOCUMENTS WHICH SPECIFY PROCUREMENT OF PRODUCTS FROM RACAL INSTRUMENTS INC.

Racal Instruments, Inc.
4 Goodyear St., Irvine, CA. 92718-2002

DOCUMENT TITLE			
FINAL ASSY, 1260-20			
SIZE	CAGE CODE	DOCUMENT NO	REV
D	21793	404773	E
SCALE/2		SHEET 1 OF 2	

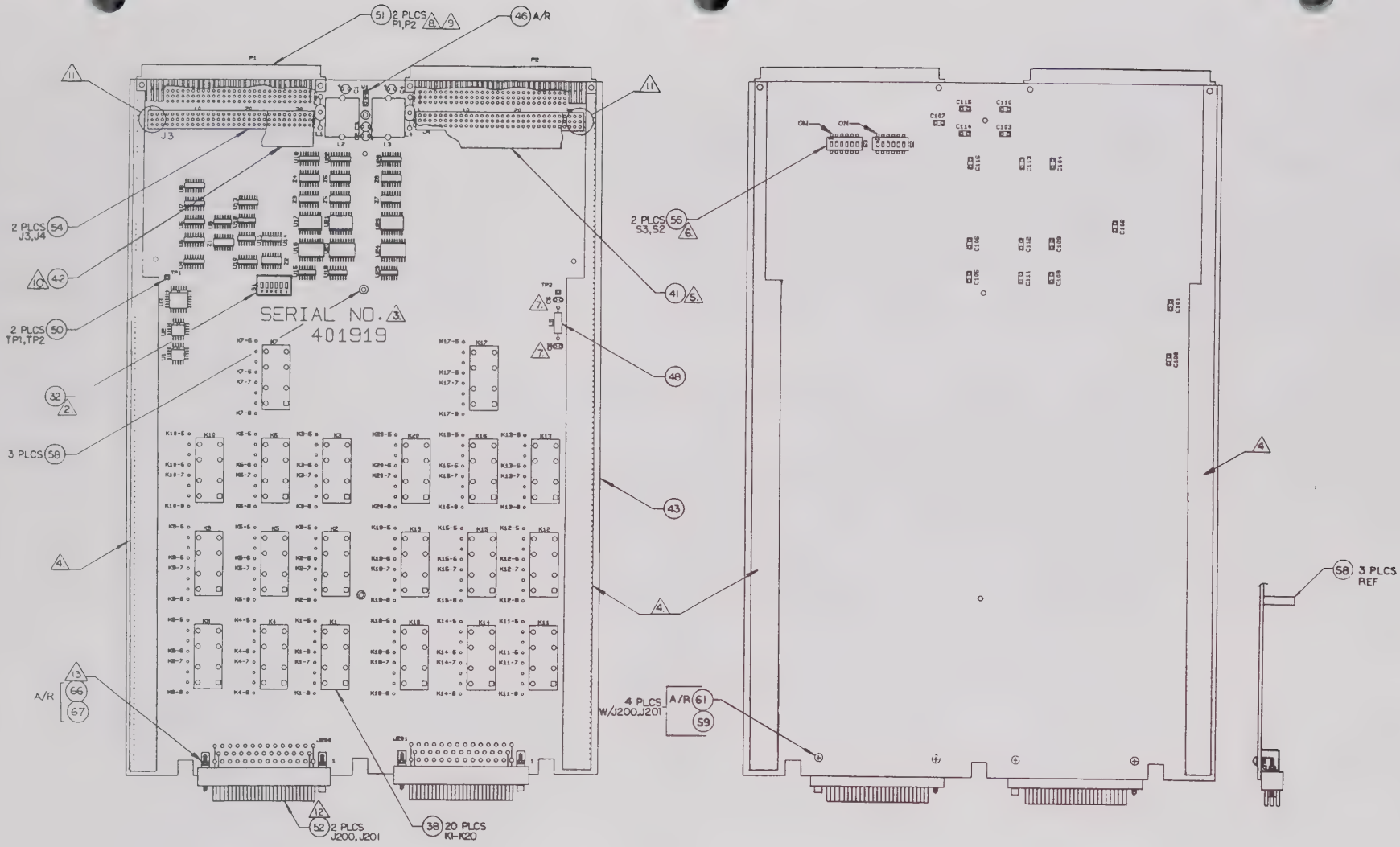

6 P1 AND P2 MUST BE INSTALLED FLUSH AT RIGHT ANGLES TO PC BOARD.

7 C5 AND C6 ARE NOT INSTALLED.

6 SET ALL S2,S3 SWITHES TO (ON) OR (CLOSED) OR (1) POSITION. DO NOT WAVE SOLDER.

5 INSTALL (ITEM 41) PCB INTO (ITEM 54) J4.

4 AREAS INDICATED TO BE FLAT AND FREE FROM SOLDER (BOTH SIDES).

3 INK STAMP SERIAL NO ON COMPONENT SIDE IN INDICATED AREA.

2 SET S1 TO LOGICAL ADDRESS 1 PER TABLE 1.

1 REFERENCE SCHEMATIC 431919.

NOTES: UNLESS OTHERWISE SPECIFIED

9 SOLDER TAILS ON CIRCUITSIDE OF PCB FOR P1 AND P2 (ITEM 51) TO BE TRIMMED TO A MAXIMUM HEIGHT OF .045.

10 INSTALL (ITEM 42) PCB INTO (ITEM 54) J3.

11 SOLDER TAILS ON CIRCUIT SIDE OF PCB FOR J3 & J4 (ITEM 54) 3 ROWS (9 PINS) NEAREST EDGE OF PC BOARD TO BE TRIMMED TO A MAXIMUM HEIGHT OF .045.

12 SOLDER TAILS ON CIRCUIT SIDE OF PCB FOR J200,J201 (ITEM 52) 2 ROWS NEAREST EDGE OF PC BOARD TO BE TRIMMED TO A MAXIMUM HEIGHT OF .045.

13 MOUNTING HARDWARE SUPPLIED WITH J200 AND J201 TO BE INSTALLED WITH ITEMS 66 AND 67 A/R.

PROPRIETARY NOTICE

THIS DOCUMENT AND THE TECHNICAL DATA HEREIN DISCLOSED ARE PROPRIETARY TO RACAL INSTRUMENTS INC. AND SHALL NOT, WITHOUT THE EXPRESS WRITTEN PERMISSION OF RACAL INSTRUMENTS INC. BE USED, RELEASED OR DISCLOSED IN WHOLE OR IN PART, OR USED TO SOLICIT QUOTATIONS FROM A COMPETITIVE SOURCE OR USED FOR MANUFACTURE BY ANYONE OTHER THAN RACAL INSTRUMENTS INC. THE INFORMATION HEREON HAS BEEN DEVELOPED AT PRIVATE EXPENSE, AND MAY ONLY BE USED FOR PURPOSES OF ENGINEERING EVALUATION AND FOR INCORPORATION INTO TECHNICAL SPECIFICATIONS AND OTHER DOCUMENTS WHICH SPECIFY PROCUREMENT OF PRODUCTS FROM RACAL INSTRUMENTS INC.

Racal Instruments, Inc.
4 Goodyear St., Irvine, CA. 92718-2002

DOCUMENT TITLE: PCB ASSY, 1260-20 OPT. POWER SWITCH

SIZE	CODE IDENT NO.	DOCUMENT NO	REV
D	21793	401919	G

SCALE 1/1 SHEET 1 OF 5

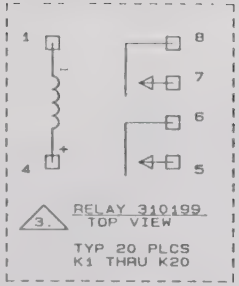

REF. DES.	IC TYPE	+5V PIN NO.	GND PIN NO.
U17, 21, 25	2803		9
U16, 20, 24	74HCT273	20	10
U14	74HCT85	16	8
U13	74LS138	16	8
U11, 12, 15, 19, 23	74HCT164	14	7
U10, 18, 22, 26	74HCT166	16	8
U9	LM339	3	12
U7, 8	26LS32	16	8
U6	26LS31	16	8
U4, 5	74HCT253	16	8
U3	231154 (22V10H)	28	14
U2	231153 (16R4)	20	10
U1	231152 (16L8Q)	20	10

IC POWER AND GROUND CONNECTIONS

HIGHEST REF. DES.
Z8
W1
U26
S3
P2
L5
K20
J201
C116

4. C5 AND C6 ARE NOT INSTALLED.

3. RELAYS K1 THRU K20 ARE RACAL P/N 310199.
ALL RELAYS SHOWN IN DE-ENERGIZED POSITION.

2. RESISTOR NETWORKS ARE IN OHMS.

1. CAPACITOR VALUES ARE IN MICROFARADS, 50V, +/-20%

NOTES: UNLESS OTHERWISE SPECIFIED

PROPRIETARY NOTICE

THIS DOCUMENT AND THE TECHNICAL DATA HEREIN DISCLOSED ARE PROPRIETARY TO RACAL INSTRUMENTS INC. AND SHALL NOT, WITHOUT THE EXPRESS WRITTEN PERMISSION OF RACAL INSTRUMENTS INC. BE USED, RELEASED OR DISCLOSED IN WHOLE OR IN PART, OR USED TO SOLICIT QUOTATIONS FROM A COMPETITIVE SOURCE OR USED FOR MANUFACTURE BY ANYONE OTHER THAN RACAL INSTRUMENTS INC. THE INFORMATION HEREON HAS BEEN DEVELOPED AT PRIVATE EXPENSE, AND MAY ONLY BE USED FOR PURPOSES OF ENGINEERING EVALUATION AND FOR INCORPORATION INTO TECHNICAL SPECIFICATIONS AND OTHER DOCUMENTS WHICH SPECIFY PROCUREMENT OF PRODUCTS FROM RACAL INSTRUMENTS INC.

Racal Instruments, Inc.
4 Goodyear St., Irvine, CA. 92718-2002

DOCUMENT TITLE
SCHEM., 1260-20 OPTION
POWER SWITCH

SIZE	CODE IDENT NO	DOCUMENT NO	REV
B	21793	431919	A

SCALE ——— SHEET 1 OF 10

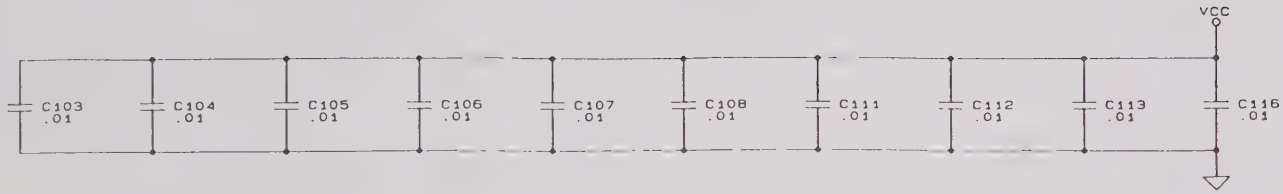

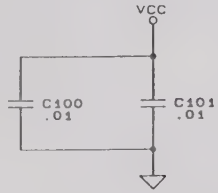

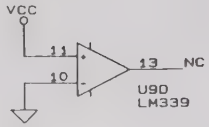

SIZE	CODE IDENT NO.	DOCUMENT NO	REV
B	21793	431919	A
SCALE		SHEET 2 OF 10	

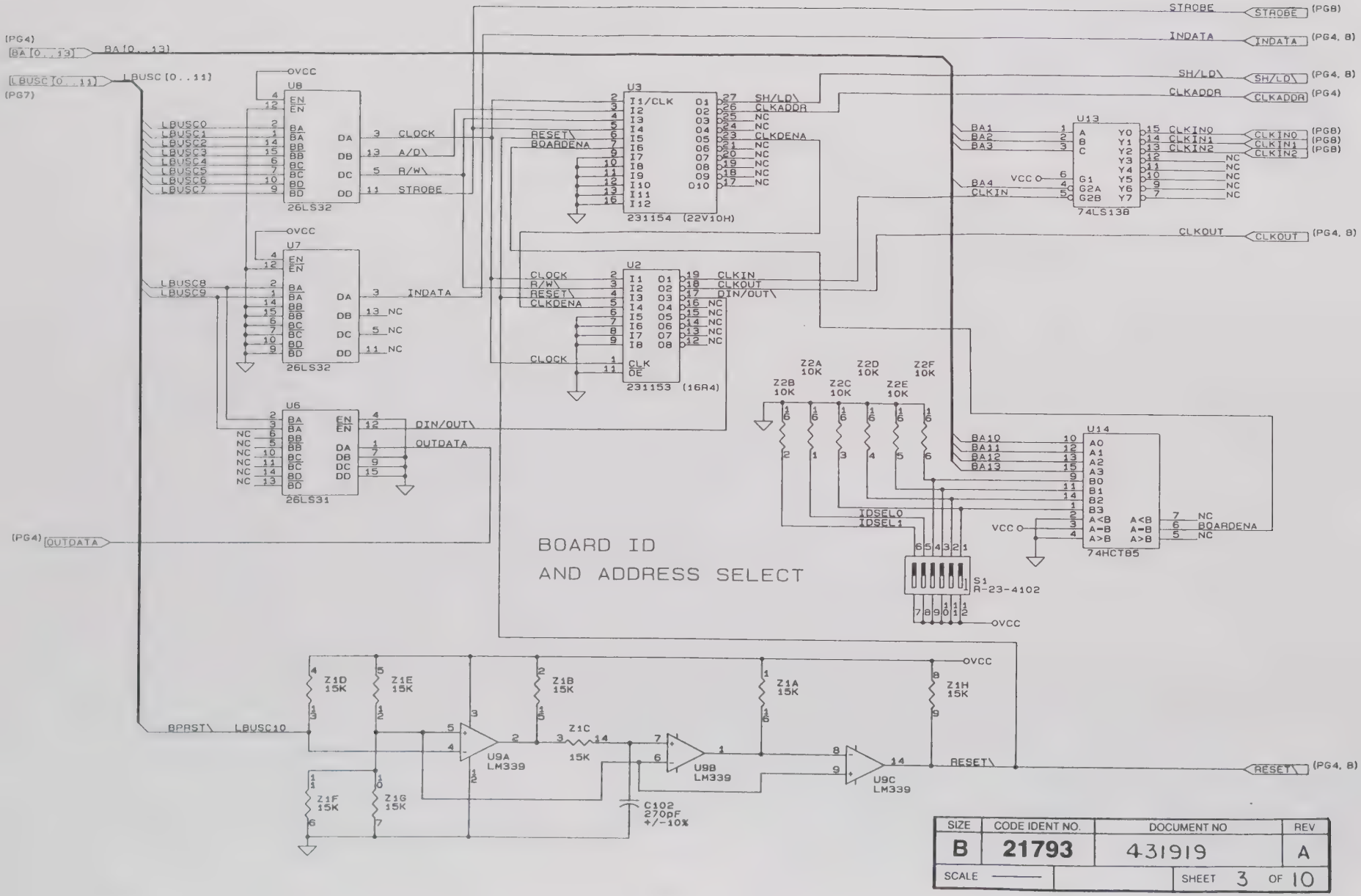

SIZE	CODE IDENT NO.	DOCUMENT NO	REV
B	21793	431919	A
SCALE		SHEET 3 OF 10	

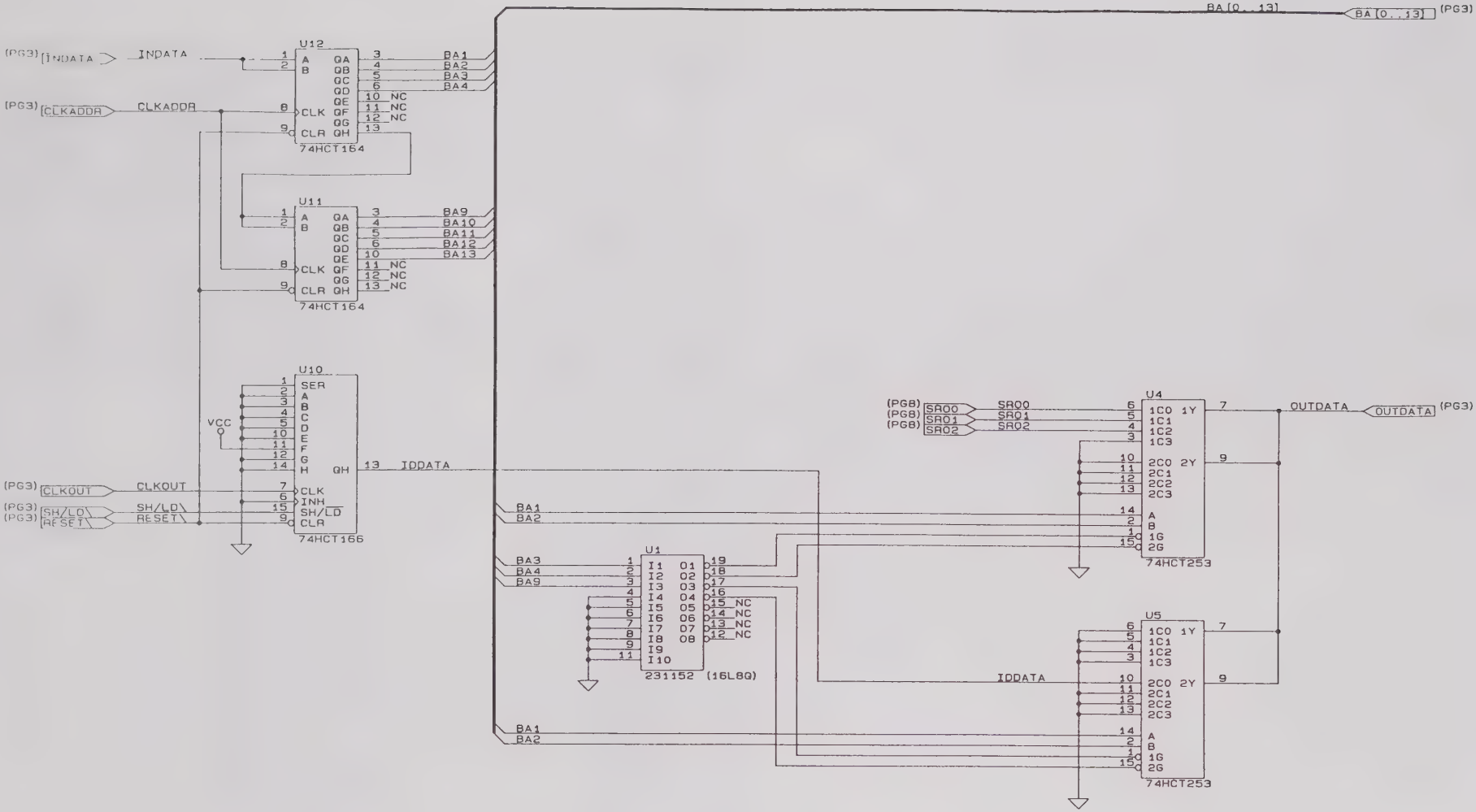

SIZE	CODE IDENT NO.	DOCUMENT NO.	REV.
B	21793	431919	A
SCALE		SHEET 4 OF 10	

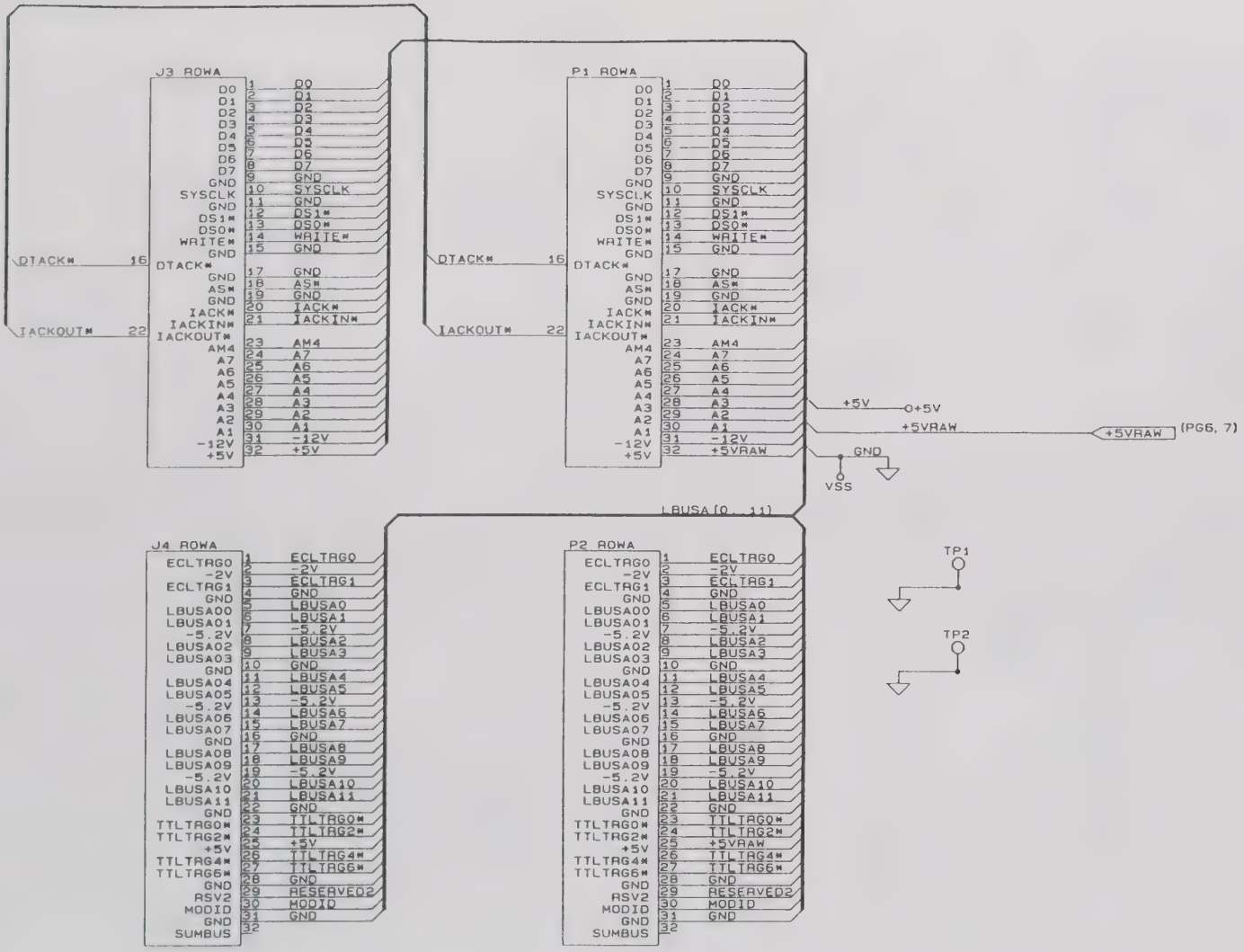

SIZE	CODE IDENT NO	DOCUMENT NO	REV
B	21793	431919	A
SCALE ———		SHEET 5 OF 10	

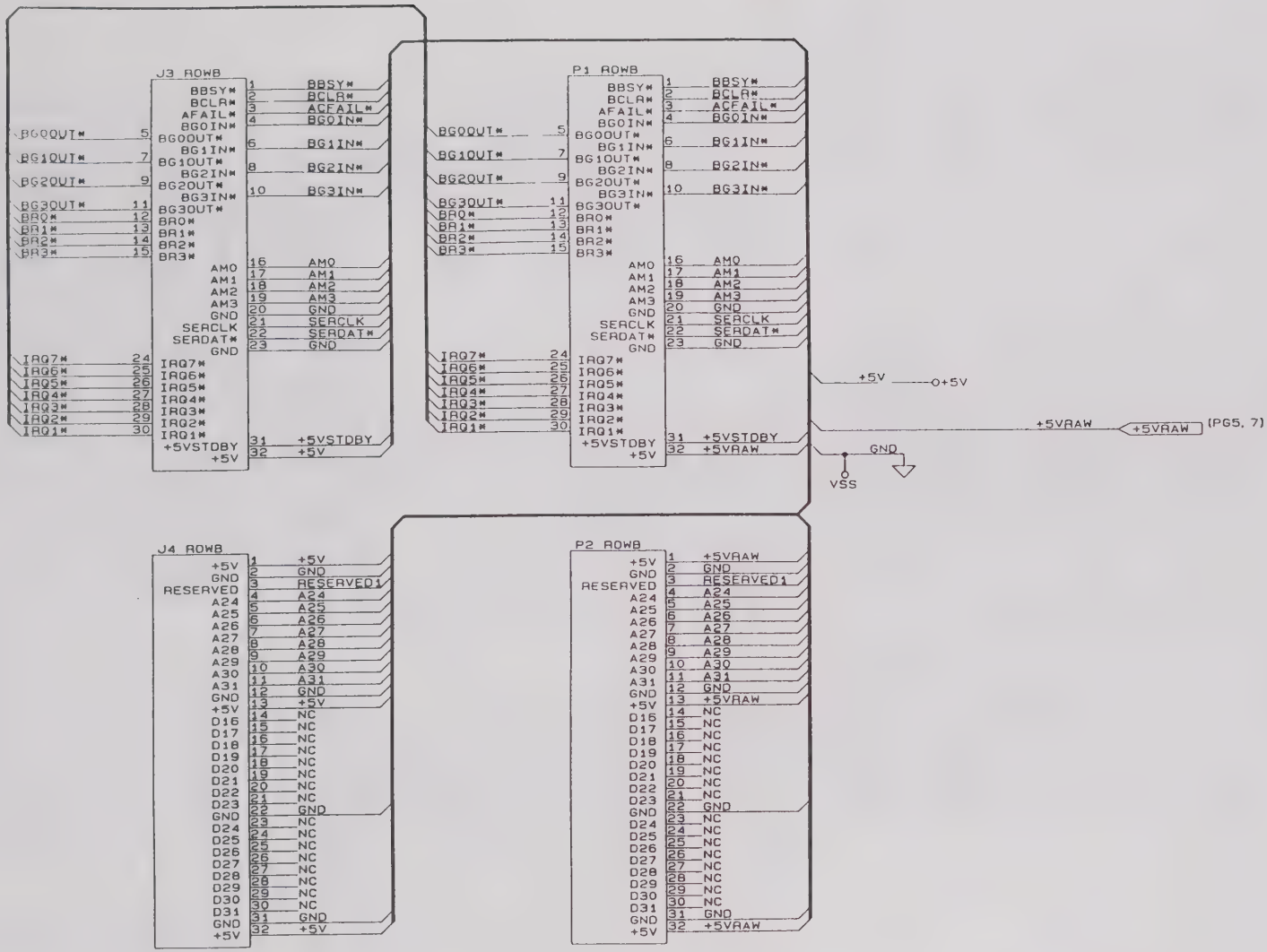

SIZE	CODE IDENT NO.	DOCUMENT NO.	REV.
B	21793	431919	A
SCALE		SHEET 6 OF 10	

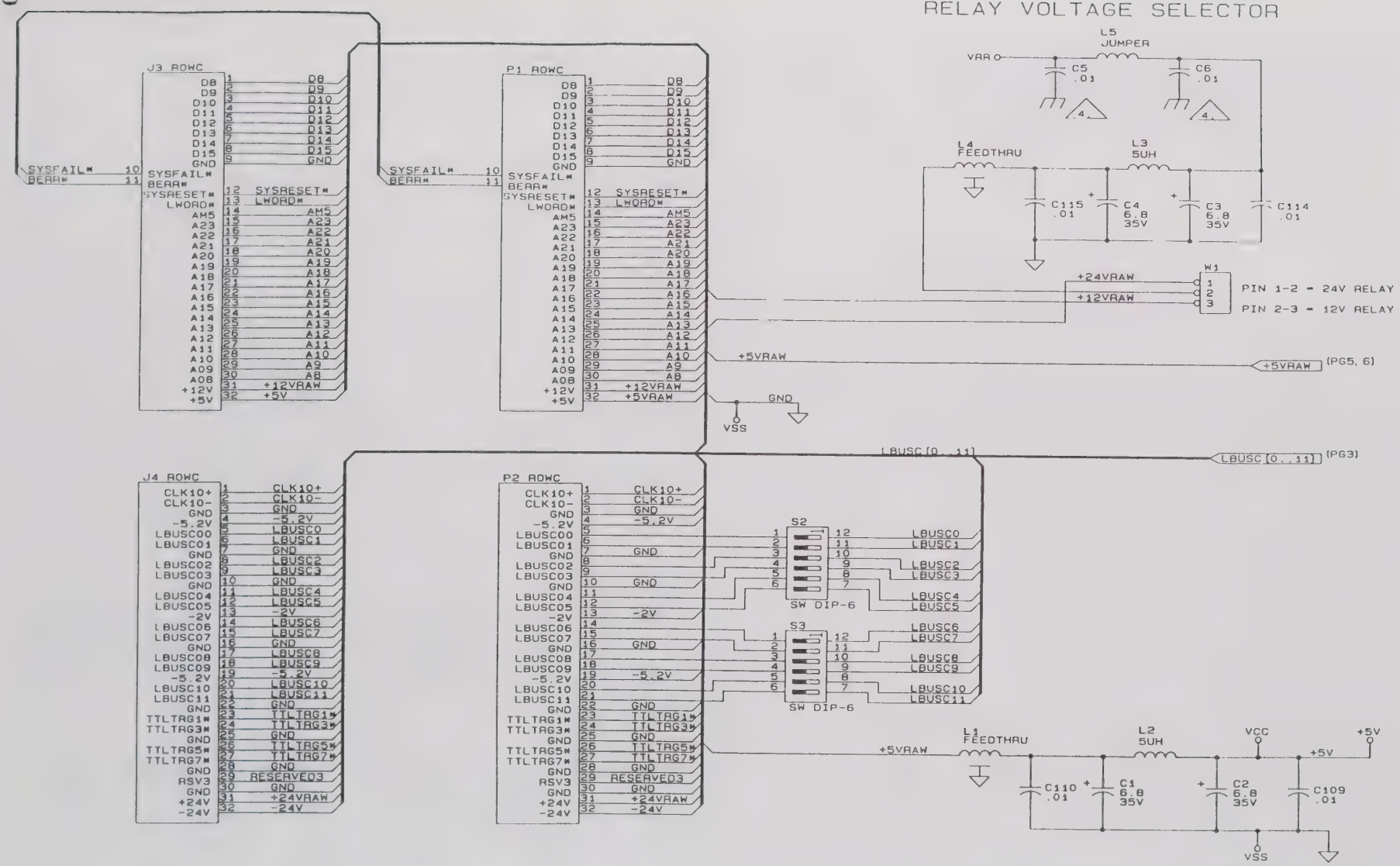

SIZE	CODE IDENT NO.	DOCUMENT NO	REV
B	21793	431919	A
SCALE		SHEET 7 OF 10	

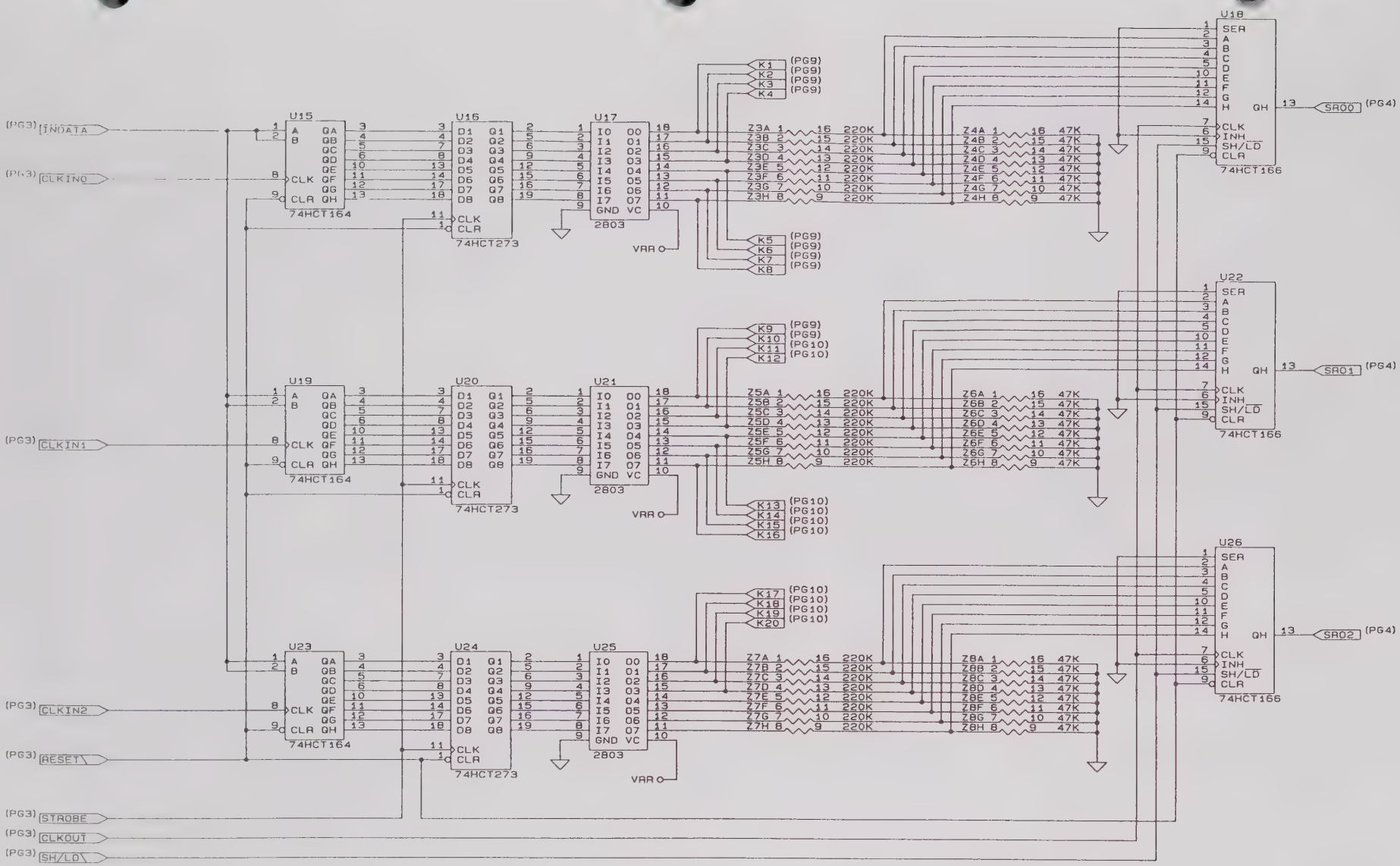

SIZE	CODE IDENT NO.	DOCUMENT NO.	REV
B	21793	431919	A
SCALE		SHEET 8 OF 10	

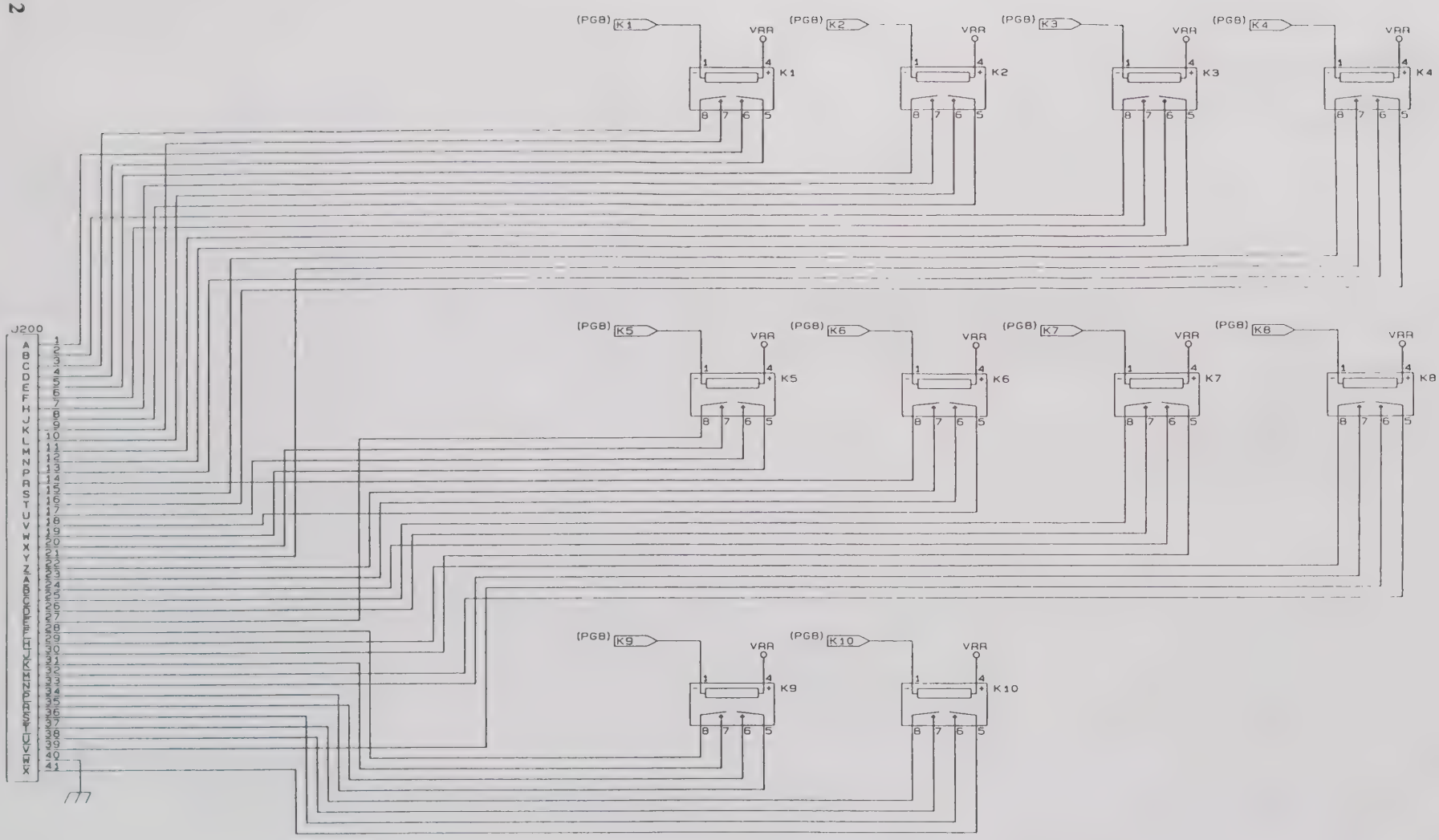

SIZE	CODE IDENT NO	DOCUMENT NO	REV
B	21793	431919	A
SCALE		SHEET 9 OF 10	

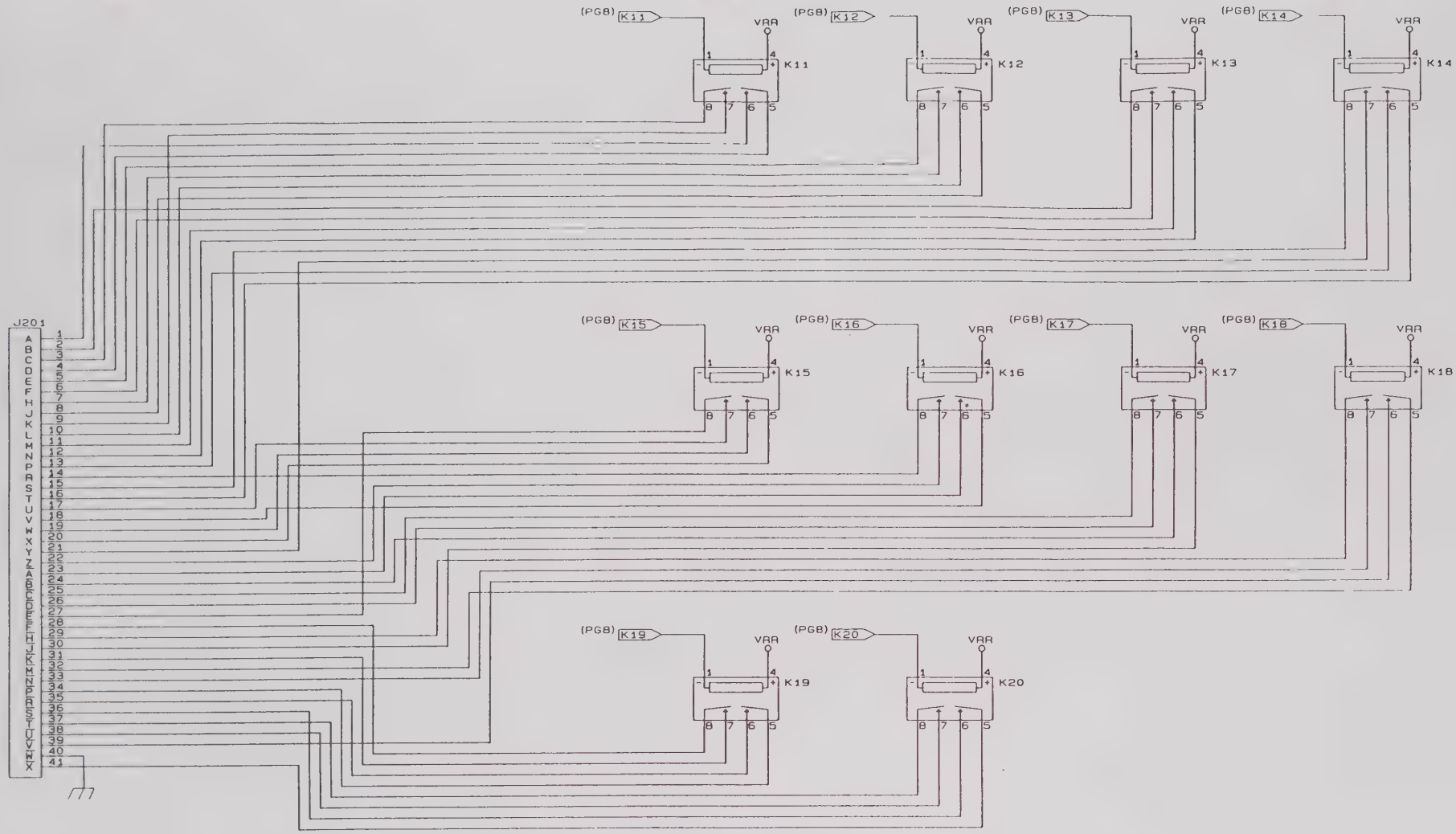

SIZE	CODE IDENT NO	DOCUMENT NO	REV
B	21793	431919	A
SCALE		SHEET 10 OF 10	

5.0 Parts List

404773	Final Assembly, 1260-20	5-2
404935	Shipping Kit, 1260-20	5-2
401919	PCB Assy, 1260-20	5-3
List of Suppliers		5-5

404773 - FINAL ASSY., 1260-20

REF DESIG	RACAL INST P/N	DESCRIPTION	FSC	MANUFACTURER'S P/N
{1}1	401919	PCB ASSY., 1260-20	21793	401919
{2}1	404935	SHIPPING KIT, 1260-20	21793	404935
{3}1	455523-001	PANEL, FRONT, 1260-20	21793	455523-001
{4}1	455524	COVER, BOTTOM	21793	455524
{5}1	455525	COVER, TOP	21793	455525
{8}1	611264	HANDLE, EXTRACTOR, BOTTOM	62559	20817-327
{9}1	611265	HANDLE, EXTRACTOR, TOP	62559	20817-328
{10}.5	611266	MOUNTING HARDWARE, HANDLE	62559	21100-745
{11}10	617101	WASHER, FLAT, LIGHT SERIES, #2	-	-
.{12}10	615014	SCREW, PPH, 2-56 X .250	-	-
{13}3	615049	SCREW, PPH, 4-40 X .875	-	-
{14}6	615512	SCREW, PFH, 2-56X.188	-	-
{15}10	617126	WASHER, LOCK, #2, LIGHT SERIES	-	-
{16}3	617127	WASHER, LOCK, #4, LIGHT SERIES	-	-
{19}1	921148-001	LABEL SET VXI	21793	921148-001
{21}1	921059	LABEL, CAUTION, STATIC	21793	921059
{24}1	921212-003	LABEL, VXI, 1260-20	21793	921212-003
{26}1	921309	LABEL, VXI SWITCH ID	21793	921309

404935 - SHIPPING KIT, 1260-20

REF DESIG	RACAL INST P/N	DESCRIPTION	FSC	MANUFACTURER'S P/N
{3}2	455540	KEY, LOCKOUT, TTL, A/C	21793	455540
{4}2	455541	KEY, LOCKOUT, TTL, A/C	21793	455541
{5}2	455542	KEY, LOCKOUT, TTL, A/C	21793	455542
{7}82	601849	TERMINAL, SOLDER	28198	FS116N2
{8}2	601850	CONNECTOR, CAB. RECEPT, 41 PIN	28198	41FOE100JO
{10}3	615014	SCREW, PPH, 2-56 X .250	-	-

401919 - PCB ASSY, 1260-20 OPT.

REF DESIG	RACAL INST P/N	DESCRIPTION	FSC	MANUFACTURER'S P/N
C1-C4	110126	CAP, TANTA, 6.8UF, 35V, 20 PERCENT	05397	T355F685M035A5
C100	R-21-1801	CAP, CHIP, 10 NF	95275	VJ1206Y103MF
C101	R-21-1801	CAP, CHIP, 10 NF	95275	VJ1206Y103MF
C102	130177	CAPACITOR, CHIP, SMD, 270PF	95275	VJ1206A271KXAMT
C103-C116	R-21-1801	CAP, CHIP, 10 NF	95275	VJ1206Y103MF
J3	601925	CONNECTOR, PCB, RECEPT, 3 ROW, 96P	52072	618008
J4	601925	CONNECTOR, PCB, RECEPT, 3 ROW, 96P	52072	618008
J200	601851	CONNECTOR, PCB, PLUG, 41 PIN	28198	GAPL41MOTOLB
J201	601851	CONNECTOR, PCB, PLUG, 41 PIN	28198	GAPL41MOTOLB
K1-K20	310199	RELAY, POWER, 2 FORM A	61529	ST2E-DC24V
L1	100164	CAP, FEED-THRU,800PF, 50V	00779	842448-2
L2	310193	CHOKE, SHIELDED, 5UH	91637	IH-5-5-10
L3	310193	CHOKE, SHIELDED, 5UH	91637	IH-5-5-10
L4	100164	CAP, FEED-THRU,800PF, 50V	00779	842448-2
L5	600245	JUMPER, INSULATED	52210	L-2007-1
P1	601675	CONNECTOR, EUROCARD TYPE C, 96-PIN	00779	532505-1
P2	601675	CONNECTOR, EUROCARD TYPE C, 96-PIN	00779	532505-1
S1	600814	SWITCH, SLIDE, 6SPST	02660	31-010
S2	601915	SWITCH, DIP 6 POS, SMD	91506	ADF-06ST
S3	601915	SWITCH, DIP 6 POS, SMD	91506	ADF-06ST
TP1	601197	POST, TEST, .025 SQ	00779	6-87022-6
TP2	601197	POST, TEST, .025 SQ	00779	6-87022-6
U1	231152	IC, PROGRAMMED PIA	21793	231152
U2	231153	IC, PROGRAMMED PLA	21793	231153
U3	231154	IC, PROGRAMMED PLA	21793	231154
U4	231147	IC, MULTIPLEXER	04713	74HC253D
U5	231147	IC, MULTIPLEXER	04713	74HC253D
U6	231125	IC, DIGITAL, LINE DRIVER	27014	DS26LS31MN
U7	231096	IC, QUAD DIFF RECEIVER	01295	AM26LS32ACD
U8	231096	IC, QUAD DIFF RECEIVER	01295	AM26LS32ACD
U9	231093	IC, QUAD COMPARATOR	04713	LM339D
U10	231120	IC, 8-BIT, PARALLEL/SERIAL OUT S.R.	18324	74HCT166D
U11	231131	IC, DIGITAL, SHIFT REGISTER	18324	PC74HCT164D
U12	231131	IC, DIGITAL, SHIFT REGISTER	18324	PC74HCT164D
U13	231094	IC, DEMUX DECODER	18324	N74LS138D
U14	231135	IC, DIGITAL, 4-BIT COMPARATOR	18324	PC74HCT85D
U15	231131	IC, DIGITAL, SHIFT REGISTER	18324	PC74HCT164D
U16	231130	IC, DIGITAL, FLIP FLOP	18324	PC74HC273
U17	231098	IC, SOIC TRANSISTOR	56289	ULN-2803LW
U18	231120	IC, 8-BIT, PARALLEL/SERIAL OUT S.R.	18324	74HCT166D
U19	231131	IC, DIGITAL, SHIFT REGISTER	18324	PC74HCT164D
U20	231130	IC, DIGITAL, FLIP FLOP	18324	PC74HC273
U21	231098	IC, SOIC TRANSISTOR	56289	ULN-2803LW
U22	231120	IC, 8-BIT, PARALLEL/SERIAL OUT S.R.	18324	74HCT166D
U23	231131	IC, DIGITAL, SHIFT REGISTER	18324	PC74HCT164D
U24	231130	IC, DIGITAL, FLIP FLOP	18324	PC74HC273
U25	231098	IC, SOIC TRANSISTOR	56289	ULN-2803LW
U26	231120	IC, 8-BIT, PARALLEL/SERIAL OUT S.R.	18324	74HCT166D
Z1	080114	RES NETWORK, 16P8R, 15K	73138	628-AL-153J
Z2	080120	RES NETWORK, 10K	11236	767-161R10K
Z3	080119	RES NETWORK, 220K	91637	SOMC-1603-224K
Z4	080117	RES NETWORK, 16P8R, 47K	73138	628-AL-473J
Z5	080119	RES NETWORK, 220K	91637	SOMC-1603-224K
Z6	080117	RES NETWORK, 16P8R, 47K	73138	628-AL-473J
Z7	080119	RES NETWORK, 220K	91637	SOMC-1603-224K
Z8	080117	RES NETWORK, 16P8R, 47K	73138	628-AL-473J
{41}1	401951	PCB ASSY., LBUS JUMPER	21793	401951
{42}1	401951-003	PCB ASSY., P3 JUMPER	21793	401951-003
{43}1	411919	PCB, POWER MODULE(UNLOADED)	21793	411919

401919 - PCB ASSY, 1260-20 OPT.

REF DESIG	RACAL INST P/N	DESCRIPTION	FSC	MANUFACTURER'S P/N
{46}A/R	500022	WIRE, BARE COPPER/TIN, 22 GA	21793	500022
{58}3	611227	SPACER, PRESS, #4, PCB	46384	KFSE-116-20
{59}4	615027	SCREW, PPH, 3-48 X .188	-	-
{61}A/R	920962	LOCTITE, 242, MED STR.	05972	272
{66}A/R	921279	LOCQUIC, PRIMER	05972	74756
{67}A/R	921280	LOCTITE, HIGH STRENGTH	05972	271

FSC	SUPPLIER
00779	AMP, INC. HARRISBURG, PA
01295	TEXAS INSTRUMENTS, INC. DALLAS, TX
02660	AMPHENOL CORP. BROADVIEW, IL
04713	MOTOROLA, INC. (SEMICONDUCTOR PRODUCTS DIV.) PHOENIX, AZ
05397	UNION CARBIDE CORP. (MATERIALS SYSTEMS DIV.) CLEVELAND, OH
05972	LOCTITE CORP. HARTFORD, CT
11236	CTS OF BERNE, INC. BERNE, IN
18324	SIGNETICS, INC. SUNNYVALE, CA
21793	RACAL INSTRUMENTS INC. IRVINE, CA
27014	NATIONAL SEMI-CONDUCTOR CORP. SANTA CLARA, CA
28198	POSITRONIC INDUSTRIES INC. SPRINGFIELD, MO
46384	PENN ENG. & MFG. CORP DOYLESTOWN, PA
52072	CIRCUIT ASSY. CORP. COSTA MESA, CA
52210	GETTING ENGRG. & MFG. CO. SPRING MILLS, PA
56289	SPAGUE ELECTRIC CO. N. ADAMS, MA
61529	AROMAT CORP. CUPERTINO, CA
62559	SCHROFF, INC. WARWICK, RI
73138	BECKMAN INSTRUMENTS FULLERTON, CA
91506	AUGAT, INC. ATTLEBORO, MA
91637	DALE ELECTRONICS, INC. COLUMBUS, NE
95275	VITRAMON, INC. BRIDGEPORT, CT

6.0 Optional Harness Assemblies

The following harness assemblies are used to connect Racal Instruments Model 1260-20 to Freedom Series Test Receiver Interfaces.

Each harness documentation consists of an assembly drawing, parts list, system wire list and wire list.

8A	407276	Virginia Panel, Inc. Series VP90 Interface Harness
5A	407277-005	TTI Testron, Inc. Interface Harness (TTI Receiver must be above chassis)
8A	407277-008	TTI Testron, Inc. Interface Harness (TTI Receiver must be above chassis)

For more information on Racal Instruments complete line of Test Receiver Interface solutions, contact your Sales Representative.

DWG. NO.	SH	REV.
407276	1	C

PROPRIETARY NOTICE

THIS DOCUMENT, AND THE TECHNICAL DATA HEREON DISCLOSED ARE PROPRIETARY TO RACAL INSTRUMENTS INC. AND SHALL NOT, WITHOUT THE EXPRESS WRITTEN PERMISSION OF RACAL INSTRUMENTS INC. BE USED, RELEASED OR DISCLOSED IN WHOLE OR IN PART, OR USED TO SOLICIT QUOTATION FROM A COMPETITIVE SOURCE OR USED FOR MANUFACTURE BY ANYONE OTHER THAN RACAL INSTRUMENTS INC. THE INFORMATION HEREON HAS BEEN DEVELOPED AT PRIVATE EXPENSE, AND MAY ONLY BE USED FOR PURPOSES OF ENGINEERING EVALUATION AND FOR INCORPORATION INTO TECHNICAL SPECIFICATIONS AND OTHER DOCUMENTS WHICH SPECIFY PROCUREMENT OF PRODUCTS FROM RACAL INSTRUMENTS INC.

REVISIONS				
ZONE	REV	DESCRIPTION	DATE	APPROVED
	A	RELEASED PER DRN NO. 1546	3-16-95	LMC
	B	REVISED PER EO NO. 23773	SL 4-16-96	JR 4/23/96
	C	REVISED PER EO NO. 24324	SL 5-7-96	SL 5/8/96
		REVISED PER EO NO.		

NOTES:

1. SEE WIRE LIST FOR CONNECTIONS AND CONTACT ASSIGMENT.
2. 2 CABLE ASSEMBLIES TO BE FORMED:
   - J200 TO J100.
   - J201 TO J101.

△3 WHITE INK STAMP J--- AT THE SIDE OF CONNECTORS. LOCATE APPROXIMATELY WHERE SHOWN.

△4 MARK J--- ON APPROPRIATE SIZE SHRINK TUBING AND LOCATE APPROXIMATELY WHERE SHOWN.

△5 SPRAY PROTECTIVE COATING (ITEM 6) AFTER MARKING.

6. MATING ITA CONNECTOR FOR J100 & J101 IS VIRGINIA PANEL P/N 510 108 101. USE ITA PIN P/N 610 110 129.
7. ENCLOSE CABLES IN SINGLE BAG AND IDENTIFY WITH PART NUMBER AND CURRENT REVISION.

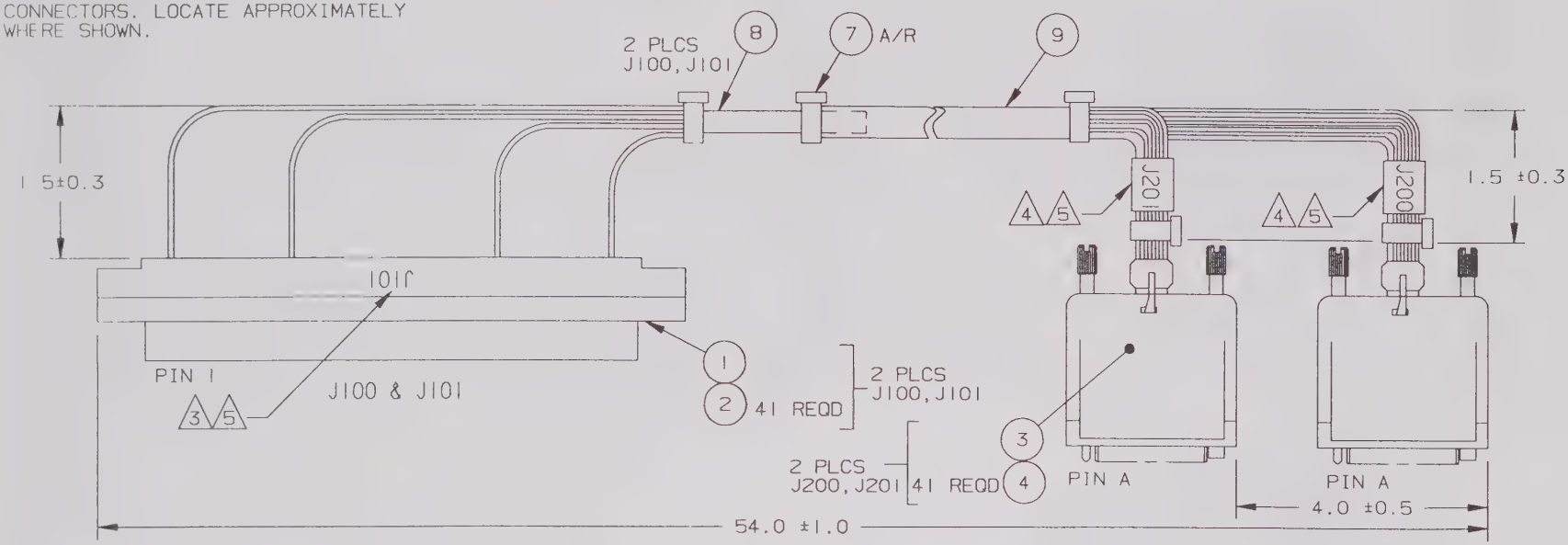

PRECIOUS METAL INDICATOR CODE						
WEIGHTS						
STRESS						
MATERIALS & PROCESSES						
QUALITY ASSURANCE R.BLANCHARD	2/24/95					
MANUFACTURING ENGRG T.VILLICANA	2/22/95					FREEDOM
ADDITIONAL APPROVALS	DATE	PART DASH NO.	NEXT QTY REQ'D PER ASSY	FINAL	NEXT ASSY APPLICATION	USED ON

UNLESS OTHERWISE SPECIFIED DIMENSIONS ARE IN INCHES TOLERANCES ARE ;
ANGLES DECIMALS HOLE Ø
MACH'D ± 0°30' .XX ± .02 +.004
FORMED ± 1° .XXX ± .010 -.001
DO NOT SCALE DRAWING
MATERIAL:
FINISH:
SIMILAR TO | SPECIAL MARKING STAMP

CONTRACT NO.

APPROVALS	DATE
DRAWN A SATTERFIELD	11-21-94
CHECKED AUSMAN	1-31-95
ENGR T.ELMORE/MLS	2-2-95
DESIGN ACTIVITY	

RACAL Instruments, Inc.
4 Goodyear St., Irvine, CA. 92718-2002

TITLE
HARNESS ASSY, 1260-20, VP90

SIZE	CAGE CODE	DWG NO.	REV.
B	21793	407276	C

SCALE 1:1 | CALC. WT | ACT. WT | SHEET 1 OF 9

980340 REV. F

ENGINEERING PARTS LIST

ITEM	BIN	PART NO.	DESCRIPTION	QTY	REFERENCE
1		602201-001	CON-RCV-PLG064C.---D-VP90	2	J100-J101
2		602201-905	CONTACT,SIGNAL,14AWG,VP90	82	W/J100-J101
3		601850	CON-CAB-RCP41PC.--1260-20	2	J200-J201
4		602200	CONTACT,CRIMP,RECPT,24-20GA	82	W/J200-J201
5		520999	WRTEF-STR20G-9-9-9 WHT	A/R	
6		910541	POLYURETHANE CONF. COAT	A/R	
7		610777	TIE-CA-LKG-.064-.075	A/R	
8		GRP-110-1/2	SLEEVING,BRAIDED POLY,1/2	A/R	
9		GRP-110-3/4	SLEEVING,BRAIDED POLY,3/4	A/R	

DOC. NO. 407276

RACAL Instruments, Inc., 4 Goodyear St., Irvine, CA 92718

DOCUMENT TITLE	SIZE	CODE NO.	DOCUMENT NO.	REV
HARNESS ASSEMBLY, 1260-20, VP90	A	21793	407276	C
	DRN		SHEET 2 of 9	

ENGINEERING WIRE LIST

WIRE	FROM	TO	TYPE	PART #	WIRE LEN	REFERENCE
	BLK AA (J100)	Uxx-SLOT yy (J200)	CABLE	407276		SYSTEM WIRE LIST
	BLK AA (J101)	Uxx-SLOT yy (J201)	CABLE	407276		

This system wirelist serves as a template for incorporating this harness assembly into the overall system wirelist. It does not in any way affect the fabrication of this harness assembly.

DOC. NO. 407276

ENGINEERING WIRE LIST

WIRE	FROM	TO	TYPE	PART #	WIRE LEN	REFERENCE
1	J100-1 602201-905	J200-A 602200	20 AWG WHT	520999	54"	CHANNEL 00 IN HI
2	J100-33 602201-905	J200-C 602200	20 AWG WHT	520999	54"	CHANNEL 00 IN LO
3	J100-2 602201-905	J200-D 602200	20 AWG WHT	520999	54"	CHANNEL 00 OUT HI
4	J100-34 602201-905	J200-K 602200	20 AWG WHT	520999	54"	CHANNEL 00 OUT LO
5	J100-3 602201-905	J200-E 602200	20 AWG WHT	520999	54"	CHANNEL 01 IN HI
6	J100-35 602201-905	J200-J 602200	20 AWG WHT	520999	54"	CHANNEL 01 IN LO
7	J100-4 602201-905	J200-H 602200	20 AWG WHT	520999	54"	CHANNEL 01 OUT HI
8	J100-36 602201-905	J200-L 602200	20 AWG WHT	520999	54"	CHANNEL 01 OUT LO
9	J100-5 602201-905	J200-B 602200	20 AWG WHT	520999	54"	CHANNEL 02 IN HI
10	J100-37 602201-905	J200-M 602200	20 AWG WHT	520999	54"	CHANNEL 02 IN LO
11	J100-6 602201-905	J200-F 602200	20 AWG WHT	520999	54"	CHANNEL 02 OUT HI
12	J100-38 602201-905	J200-N 602200	20 AWG WHT	520999	54"	CHANNEL 02 OUT LO
13	J100-7 602201-905	J200-P 602200	20 AWG WHT	520999	54"	CHANNEL 03 IN HI
14	J100-39 602201-905	J200-S 602200	20 AWG WHT	520999	54"	CHANNEL 03 IN LO
15	J100-8 602201-905	J200-T 602200	20 AWG WHT	520999	54"	CHANNEL 03 OUT HI
16	J100-40 602201-905	J200-Y 602200	20 AWG WHT	520999	54"	CHANNEL 03 OUT LO
17	J100-9 602201-905	J200-U 602200	20 AWG WHT	520999	54"	CHANNEL 04 IN HI
18	J100-41 602201-905	J200-X 602200	20 AWG WHT	520999	54"	CHANNEL 04 IN LO
19	J100-10 602201-905	J200-W 602200	20 AWG WHT	520999	54"	CHANNEL 04 OUT HI
20	J100-42 602201-905	J200-e 602200	20 AWG WHT	520999	54"	CHANNEL 04 OUT LO
21	J100-11 602201-905	J200-V 602200	20 AWG WHT	520999	54"	CHANNEL 05 IN HI
22	J100-43 602201-905	J200-R 602200	20 AWG WHT	520999	54"	CHANNEL 05 IN LO
23	J100-12 602201-905	J200-a 602200	20 AWG WHT	520999	54"	CHANNEL 05 OUT HI
24	J100-44 602201-905	J200-Z 602200	20 AWG WHT	520999	54"	CHANNEL 05 OUT LO
25	J100-13 602201-905	J200-b 602200	20 AWG WHT	520999	54"	CHANNEL 06 IN HI

ENGINEERING WIRE LIST

WIRE	FROM	TO	TYPE	PART #	WIRE LEN	REFERENCE
26	J100-45 602201-905	J200-c 602200	20 AWG WHT	520999	54"	CHANNEL 06 IN LO
27	J100-14 602201-905	J200-j 602200	20 AWG WHT	520999	54"	CHANNEL 06 OUT HI
28	J100-46 602201-905	J200-d 602200	20 AWG WHT	520999	54"	CHANNEL 06 OUT LO
29	J100-15 602201-905	J200-m 602200	20 AWG WHT	520999	54"	CHANNEL 07 IN HI
30	J100-47 602201-905	J200-n 602200	20 AWG WHT	520999	54"	CHANNEL 07 IN LO
31	J100-16 602201-905	J200-v 602200	20 AWG WHT	520999	54"	CHANNEL 07 OUT HI
32	J100-48 602201-905	J200-h 602200	20 AWG WHT	520999	54"	CHANNEL 07 OUT LO
33	J100-17 602201-905	J200-p 602200	20 AWG WHT	520999	54"	CHANNEL 08 IN HI
34	J100-49 602201-905	J200-f 602200	20 AWG WHT	520999	54"	CHANNEL 08 IN LO
35	J100-18 602201-905	J200-r 602200	20 AWG WHT	520999	54"	CHANNEL 08 OUT HI
36	J100-50 602201-905	J200-k 602200	20 AWG WHT	520999	54"	CHANNEL 08 OUT LO
37	J100-19 602201-905	J200-x 602200	20 AWG WHT	520999	54"	CHANNEL 09 IN HI
38	J100-51 602201-905	J200-t 602200	20 AWG WHT	520999	54"	CHANNEL 09 IN LO
39	J100-20 602201-905	J200-s 602200	20 AWG WHT	520999	54"	CHANNEL 09 OUT HI
40	J100-52 602201-905	J200-u 602200	20 AWG WHT	520999	54"	CHANNEL 09 OUT LO
41	J100-21 602201-905	J200-w 602200	20 AWG WHT	520999	54"	CHASSIS GND
42	J100-53 NO CONNECT					
43	J100-22 NO CONNECT					
44	J100-54 NO CONNECT					
45	J100-23 NO CONNECT					
46	J100-55 NO CONNECT					
47	J100-24 NO CONNECT					
48	J100-56 NO CONNECT					
49	J100-25 NO CONNECT					
50	J100-57 NO CONNECT					

ENGINEERING WIRE LIST

WIRE	FROM	TO	TYPE	PART #	WIRE LEN	REFERENCE
51	J100-26 NO CONNECT					
52	J100-58 NO CONNECT					
53	J100-27 NO CONNECT					
54	J100-59 NO CONNECT					
55	J100-28 NO CONNECT					
56	J100-60 NO CONNECT					
57	J100-29 NO CONNECT					
58	J100-61 NO CONNECT					
59	J100-30 NO CONNECT					
60	J100-62 NO CONNECT					
61	J100-31 NO CONNECT					
62	J100-63 NO CONNECT					
63	J100-32 NO CONNECT					
64	J100-64 NO CONNECT					
65	J101-1 602201-905	J201-A 602200	20 AWG WHT	520999	54"	CHANNEL 10 IN HI
66	J101-33 602201-905	J201-C 602200	20 AWG WHT	520999	54"	CHANNEL 10 IN LO
67	J101-2 602201-905	J201-D 602200	20 AWG WHT	520999	54"	CHANNEL 10 OUT HI
68	J101-34 602201-905	J201-K 602200	20 AWG WHT	520999	54"	CHANNEL 10 OUT LO
69	J101-3 602201-905	J201-E 602200	20 AWG WHT	520999	54"	CHANNEL 11 IN HI
70	J101-35 602201-905	J201-J 602200	20 AWG WHT	520999	54"	CHANNEL 11 IN LO
71	J101-4 602201-905	J201-H 602200	20 AWG WHT	520999	54"	CHANNEL 11 OUT HI
72	J101-36 602201-905	J201-L 602200	20 AWG WHT	520999	54"	CHANNEL 11 OUT LO
73	J101-5 602201-905	J201-B 602200	20 AWG WHT	520999	54"	CHANNEL 12 IN HI
74	J101-37 602201-905	J201-M 602200	20 AWG WHT	520999	54"	CHANNEL 12 IN LO
75	J101-6 602201-905	J201-F 602200	20 AWG WHT	520999	54"	CHANNEL 12 OUT HI

ENGINEERING WIRE LIST

WIRE	FROM	TO	TYPE	PART #	WIRE LEN	REFERENCE
76	J101-38 602201-905	J201-N 602200	20 AWG WHT	520999	54"	CHANNEL 12 OUT LO
77	J101-7 602201-905	J201-P 602200	20 AWG WHT	520999	54"	CHANNEL 13 IN HI
78	J101-39 602201-905	J201-S 602200	20 AWG WHT	520999	54"	CHANNEL 13 IN LO
79	J101-8 602201-905	J201-T 602200	20 AWG WHT	520999	54"	CHANNEL 13 OUT HI
80	J101-40 602201-905	J201-Y 602200	20 AWG WHT	520999	54"	CHANNEL 13 OUT LO
81	J101-9 602201-905	J201-U 602200	20 AWG WHT	520999	54"	CHANNEL 14 IN HI
82	J101-41 602201-905	J201-X 602200	20 AWG WHT	520999	54"	CHANNEL 14 IN LO
83	J101-10 602201-905	J201-e 602200	20 AWG WHT	520999	54"	CHANNEL 14 OUT HI
84	J101-42 602201-905	J201-W 602200	20 AWG WHT	520999	54"	CHANNEL 14 OUT LO
85	J101-11 602201-905	J201-V 602200	20 AWG WHT	520999	54"	CHANNEL 15 IN HI
86	J101-43 602201-905	J201-R 602200	20 AWG WHT	520999	54"	CHANNEL 15 IN LO
87	J101-12 602201-905	J201-a 602200	20 AWG WHT	520999	54"	CHANNEL 15 OUT HI
88	J101-44 602201-905	J201-Z 602200	20 AWG WHT	520999	54"	CHANNEL 15 OUT LO
89	J101-13 602201-905	J201-b 602200	20 AWG WHT	520999	54"	CHANNEL 16 IN HI
90	J101-45 602201-905	J201-c 602200	20 AWG WHT	520999	54"	CHANNEL 16 IN LO
91	J101-14 602201-905	J201-j 602200	20 AWG WHT	520999	54"	CHANNEL 16 OUT HI
92	J101-46 602201-905	J201-d 602200	20 AWG WHT	520999	54"	CHANNEL 16 OUT LO
93	J101-15 602201-905	J201-m 602200	20 AWG WHT	520999	54"	CHANNEL 17 IN HI
94	J101-47 602201-905	J201-n 602200	20 AWG WHT	520999	54"	CHANNEL 17 IN LO
95	J101-16 602201-905	J201-v 602200	20 AWG WHT	520999	54"	CHANNEL 17 OUT HI
96	J101-48 602201-905	J201-h 602200	20 AWG WHT	520999	54"	CHANNEL 17 OUT LO
97	J101-17 602201-905	J201-p 602200	20 AWG WHT	520999	54"	CHANNEL 18 IN HI
98	J101-49 602201-905	J201-f 602200	20 AWG WHT	520999	54"	CHANNEL 18 IN LO
99	J101-18 602201-905	J201-r 602200	20 AWG WHT	520999	54"	CHANNEL 18 OUT HI
100	J101-50 602201-905	J201-k 602200	20 AWG WHT	520999	54"	CHANNEL 18 OUT LO

DOC. NO. 407276

RACAL Instruments, Inc., 4 Goodyear St., Irvine, CA 92718

DOCUMENT TITLE	SIZE	CODE NO.	DOCUMENT NO.	REV
HARNESS ASSY, 1260-20, VP90	A	21793	407276	C
	DRN			SHEET 7 of 9

ENGINEERING WIRE LIST

WIRE	FROM	TO	TYPE	PART #	WIRE LEN	REFERENCE
101	J101-19 602201-905	J201-x 602200	20 AWG WHT	520999	54"	CHANNEL 19 IN HI
102	J101-51 602201-905	J201-t 602200	20 AWG WHT	520999	54"	CHANNEL 19 IN LO
103	J101-20 602201-905	J201-s 602200	20 AWG WHT	520999	54"	CHANNEL 19 OUT HI
104	J101-52 602201-905	J201-u 602200	20 AWG WHT	520999	54"	CHANNEL 19 OUT LO
105	J101-21 602201-905	J201-w 602200	20 AWG WHT	520999	54"	CHASSIS GND
106	J101-53 NO CONNECT					
107	J101-22 NO CONNECT					
108	J101-54 NO CONNECT					
109	J101-23 NO CONNECT					
110	J101-55 NO CONNECT					
111	J101-24 NO CONNECT					
112	J101-56 NO CONNECT					
113	J101-25 NO CONNECT					
114	J101-57 NO CONNECT					
115	J101-26 NO CONNECT					
116	J101-58 NO CONNECT					
117	J101-27 NO CONNECT					
118	J101-59 NO CONNECT					
119	J101-28 NO CONNECT					
120	J101-60 NO CONNECT					
121	J101-29 NO CONNECT					
122	J101-61 NO CONNECT					
123	J101-30 NO CONNECT					
124	J101-62 NO CONNECT					
125	J101-31 NO CONNECT					

ENGINEERING WIRE LIST

WIRE	FROM	TO	TYPE	PART #	WIRE LEN	REFERENCE
126	J101-63 NO CONNECT					
127	J101-32 NO CONNECT					
128	J101-64 NO CONNECT					

DOC. NO. 407276

RACAL Instruments, Inc., 4 Goodyear St., Irvine, CA 92718

DOCUMENT TITLE	SIZE	CODE NO.	DOCUMENT NO.	REV
HARNESS ASSY, 1260-20, VP90	A	21793	407276	C
	DRN			SHEET 9 of 9

DWG. NO.	SH	REV.
407277-005	1	B

PROPRIETARY NOTICE

THIS DOCUMENT AND THE TECHNICAL DATA HEREON DISCLOSED ARE PROPRIETARY TO RACAL INSTRUMENTS INC. AND SHALL NOT, WITHOUT THE EXPRESS WRITTEN PERMISSION OF RACAL INSTRUMENTS INC. BE USED, RELEASED OR DISCLOSED IN WHOLE OR IN PART, OR USED TO SOLICIT QUOTATION FROM A COMPETITIVE SOURCE OR USED FOR MANUFACTURE BY ANYONE OTHER THAN RACAL INSTRUMENTS INC THE INFORMATION HEREON HAS BEEN DEVELOPED AT PRIVATE EXPENSE, AND MAY ONLY BE USED FOR PURPOSES OF ENGINEERING EVALUATION AND FOR INCORPORATION INTO TECHNICAL SPECIFICATIONS AND OTHER DOCUMENTS WHICH SPECIFY PROCUREMENT OF PRODUCTS FROM RACAL INSTRUMENTS INC.

NOTES:

1. SEE WIRE LIST FOR CONTACT ASSIGNMENTS AND CONNECTIONS.

△2 WHITE INK STAMP J--- APPROXIMATELY WHERE SHOWN.

△3 MARK J--- ON APPROPRIATE SIZE SHRINK TUBING APPROXIMATELY WHERE SHOWN.

△4 SPRAY PROTECTIVE COATING (ITEM 8) AFTER MARKING.

△5 INK STAMP PIN 1 ON END OF CONNECTOR WHERE SHOWN, 17 PLACES.

6. CONNECTOR J100-J116 WILL LATER CONNECT TO RECEIVER BLOCK, TTI P/N VGRCB-170H-R. MATING ITA CONNECTOR BLOCK IS TTI P/N VGFCB-170.

△7 MARK 407277-005 ON APPROPRIATE SIZE SHRINK TUBING APPROXIMATELY WHERE SHOWN. PLACE APPROPRIATE SIZE CLEAR SHRINK TUBING OVER MARKING.

REVISIONS				
ZONE	REV	DESCRIPTION	DATE	APPROVED
B/C-1	B	LOCATION OF PIN A - 2 PLCS		
		REVISED PER EO NO.		
		REVISED PER EO NO.		
		REVISED PER EO NO.		

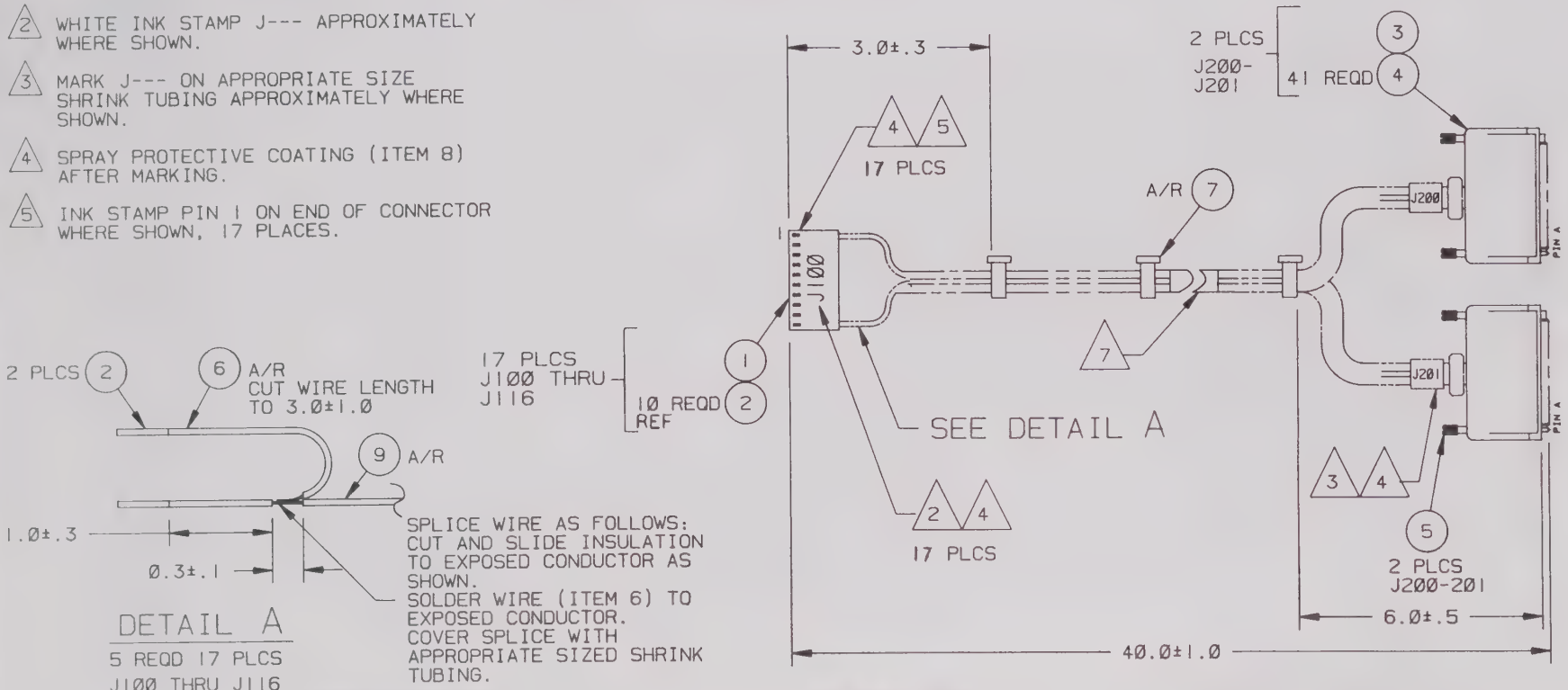

DETAIL A

5 REQD 17 PLCS
J100 THRU J116

PRECIOUS METAL INDICATOR CODE						
WEIGHTS						
STRESS						
MATERIALS & PROCESSES						
QUALITY ASSURANCE	3/13/95					
MANUFACTURING ENGRG	3/13/95					
ADDITIONAL APPROVALS	DATE	PART DASH NO.	NEXT QTY REQ'D PER ASSY	FINAL NEXT ASSY APPLICATION	FREEDOM USED ON	

UNLESS OTHERWISE SPECIFIED DIMENSIONS ARE IN INCHES TOLERANCES ARE :
ANGLES DECIMALS MOLE Ø
MACH'D ± 1°30' .XX ± .02 +.004
FORMED ± 1° .XXX ± .010 -.001
DO NOT SCALE DRAWING
MATERIAL:
FINISH:
SIM/CAR TO SPECIAL MARKING SYM.

CONTRACT NO.

APPROVALS	DATE
DRAWN ARVETTA S	94-10-20
CHECKED	95-3-13
ENGR	95-11-17
DESIGN ACTIVITY	

RACAL Instruments, Inc.
4 Goodyear St., Irvine, CA. 92718-2002

TITLE
HARNESS ASSY, 1260-20, TTI

SIZE	CAGE CODE	DWG NO.	REV.
B	21793	407277-005	B

SCALE NONE | CALC. WT | ACT. WT | SHEET 1 OF 13

980340 REV. F

ENGINEERING PARTS LIST

ITEM	BIN	PART NO.	DESCRIPTION	QTY	REFERENCE
1		602193-010	CON-CAB-RCP010C.100S	17	J100-J116
2		602199-001	CONTACT,CRIMP,RECPT,28-22GA	170	W/J100-J116
3		601850	CON-CAB-RCP41PC.	2	J200-J201
4		602200	CONTACT,CRIMP,RECPT,24-20GA	82	W/J200-J201
5		611376	JACKSCRW,SHORT TURN,GMCT	2	W/J200-J201
6		523999	WRTEF-STR22GA-9-9-9	A/R	
7		610777	TIE-CA-LKG-.064-.075	A/R	
8		910541	POLYURETHANE CONF. COAT	A/R	
9		520999	WRTEF-STR20GA-9-9-9	A/R	

ENGINEERING WIRE LIST

WIRE	FROM	TO	TYPE	PART #	WIRE LEN	REFERENCE
	BLK AAx RW 01 (J100)	Uxx-SLOT yy (J200)	CABLE	407277-005		SYSTEM WIRE LIST
	BLK AAx RW 02 (J101)	Uxx-SLOT yy (J200)	CABLE	407277-005		
	BLK AAx RW 03 (J102)	Uxx-SLOT yy (J200)	CABLE	407277-005		
	BLK AAx RW 04 (J103)	Uxx-SLOT yy (J200)	CABLE	407277-005		
	BLK AAx RW 05 (J104)	Uxx-SLOT yy (J200)	CABLE	407277-005		
	BLK AAx RW 06 (J105)	Uxx-SLOT yy (J200)	CABLE	407277-005		
	BLK AAx RW 07 (J106)	Uxx-SLOT yy (J200)	CABLE	407277-005		
	BLK AAx RW 08 (J107)	Uxx-SLOT yy (J200)	CABLE	407277-005		
	BLK AAx RW 09 (J108)	Uxx-SLOT yy (J201)	CABLE	407277-005		
	BLK AAx RW 10 (J109)	Uxx-SLOT yy (J201)	CABLE	407277-005		
	BLK AAx RW 11 (J110)	Uxx-SLOT yy (J201)	CABLE	407277-005		
	BLK AAx RW 12 (J111)	Uxx-SLOT yy (J201)	CABLE	407277-005		
	BLK AAx RW 13 (J112)	Uxx-SLOT yy (J201)	CABLE	407277-005		
	BLK AAx RW 14 (J113)	Uxx-SLOT yy (J201)	CABLE	407277-005		
	BLK AAx RW 15 (J114)	Uxx-SLOT yy (J201)	CABLE	407277-005		
	BLK AAx RW 16 (J115)	Uxx-SLOT yy (J201)	CABLE	407277-005		
	BLK AAx RW 17 (J116)	Uxx-SLOT yy (J200,J201)	CABLE	407277-005		

This system wirelist serves as a template for incorporating this harness assembly into the overall system wirelist. It does not in any way affect the fabrication of this harness assembly.

DOC. NO. 407277-005

ENGINEERING WIRE LIST

WIRE	FROM	TO	TYPE	PART #	WIRE LEN	REFERENCE
1	J100-1 602199-001	SPLICE 1 (NEAR J100)	22AWG WHT	523999	3"	CHANNEL 00 IN HI
2	J100-2 602199-001	SPLICE 1 (NEAR J100)	22AWG WHT	523999	3"	CHANNEL 00 IN HI
3	SPLICE 1 (NEAR J100)	J200-A 602200	20AWG WHT	520999	40"	CHANNEL 00 IN HI
4	J100-3 602199-001	SPLICE 2 (NEAR J100)	22AWG WHT	523999	3"	CHANNEL 00 IN LO
5	J100-4 602199-001	SPLICE 2 (NEAR J100)	22AWG WHT	523999	3"	CHANNEL 00 IN LO
6	SPLICE 2 (NEAR J100)	J200-C 602200	20AWG WHT	520999	40"	CHANNEL 00 IN LO
7	J100-5 602199-001	SPLICE 3 (NEAR J100)	22AWG WHT	523999	3"	CHANNEL 00 OUT HI
8	J100-6 602199-001	SPLICE 3 (NEAR J100)	22AWG WHT	523999	3"	CHANNEL 00 OUT HI
9	SPLICE 3 (NEAR J100)	J200-D 602200	20AWG WHT	520999	40"	CHANNEL 00 OUT HI
10	J100-7 602199-001	SPLICE 4 (NEAR J100)	22AWG WHT	523999	3"	CHANNEL 00 OUT LO
11	J100-8 602199-001	SPLICE 4 (NEAR J100)	22AWG WHT	523999	3"	CHANNEL 00 OUT LO
12	SPLICE 4 (NEAR J100)	J200-K 602200	20AWG WHT	520999	40"	CHANNEL 00 OUT LO
13	J100-9 602199-001	SPLICE 5 (NEAR J100)	22AWG WHT	523999	3"	CHANNEL 01 IN HI
14	J100-10 602199-001	SPLICE 5 (NEAR J100)	22AWG WHT	523999	3"	CHANNEL 01 IN HI
15	SPLICE 5 (NEAR J100)	J200-E 602200	20AWG WHT	520999	40"	CHANNEL 01 IN HI
16	J101-1 602199-001	SPLICE 6 (NEAR J101)	22AWG WHT	523999	3"	CHANNEL 01 IN LO
17	J101-2 602199-001	SPLICE 6 (NEAR J101)	22AWG WHT	523999	3"	CHANNEL 01 IN LO
18	SPLICE 6 (NEAR J101)	J200-J 602200	20AWG WHT	520999	40"	CHANNEL 01 IN LO
19	J101-3 602199-001	SPLICE 7 (NEAR J101)	22AWG WHT	523999	3"	CHANNEL 01 OUT HI
20	J101-4 602199-001	SPLICE 7 (NEAR J101)	22AWG WHT	523999	3"	CHANNEL 01 OUT HI
21	SPLICE 7 (NEAR J101)	J200-H 602200	20AWG WHT	520999	40"	CHANNEL 01 OUT HI
22	J101-5 602199-001	SPLICE 8 (NEAR J101)	22AWG WHT	523999	3"	CHANNEL 01 OUT LO
23	J101-6 602199-001	SPLICE 8 (NEAR J101)	22AWG WHT	523999	3"	CHANNEL 01 OUT LO
24	SPLICE 8 (NEAR J101)	J200-L 602200	20AWG WHT	520999	40"	CHANNEL 01 OUT LO
25	J101-7 602199-001	SPLICE 9 (NEAR J101)	22AWG WHT	523999	3"	CHANNEL 02 IN HI

ENGINEERING WIRE LIST

WIRE	FROM	TO	TYPE	PART #	WIRE LEN	REFERENCE
26	J101-8 602199-001	SPLICE 9 (NEAR J101)	22AWG WHT	523999	3"	CHANNEL 02 IN HI
27	SPLICE 9 (NEAR J101)	J200-B 602200	20AWG WHT	520999	40"	CHANNEL 02 IN HI
28	J101-9 602199-001	SPLICE 10 (NEAR J101)	22AWG WHT	523999	3"	CHANNEL 02 IN LO
29	J101-10 602199-001	SPLICE 10 (NEAR J101)	22AWG WHT	523999	3"	CHANNEL 02 IN LO
30	SPLICE 10 (NEAR J101)	J200-M 602200	20AWG WHT	520999	40"	CHANNEL 02 IN LO
31	J102-1 602199-001	SPLICE 11 (NEAR J102)	22AWG WHT	523999	3"	CHANNEL 02 OUT HI
32	J102-2 602199-001	SPLICE 11 (NEAR J102)	22AWG WHT	523999	3"	CHANNEL 02 OUT HI
33	SPLICE 11 (NEAR J102)	J200-F 602200	20AWG WHT	520999	40"	CHANNEL 02 OUT HI
34	J102-3 602199-001	SPLICE 12 (NEAR J102)	22AWG WHT	523999	3"	CHANNEL 02 OUT LO
35	J102-4 602199-001	SPLICE 12 (NEAR J102)	22AWG WHT	523999	3"	CHANNEL 02 OUT LO
36	SPLICE 12 (NEAR J102)	J200-N 602200	20AWG WHT	520999	40"	CHANNEL 02 OUT LO
37	J102-5 602199-001	SPLICE 13 (NEAR J102)	22AWG WHT	523999	3"	CHANNEL 03 IN HI
38	J102-6 602199-001	SPLICE 13 (NEAR J102)	22AWG WHT	523999	3"	CHANNEL 03 IN HI
39	SPLICE 13 (NEAR J102)	J200-P 602200	20AWG WHT	520999	40"	CHANNEL 03 IN HI
40	J102-7 602199-001	SPLICE 14 (NEAR J102)	22AWG WHT	523999	3"	CHANNEL 03 IN LO
41	J102-8 602199-001	SPLICE 14 (NEAR J102)	22AWG WHT	523999	3"	CHANNEL 03 IN LO
42	SPLICE 14 (NEAR J102)	J200-S 602200	20AWG WHT	520999	40"	CHANNEL 03 IN LO
43	J102-9 602199-001	SPLICE 15 (NEAR J102)	22AWG WHT	523999	3"	CHANNEL 03 OUT HI
44	J102-10 602199-001	SPLICE 15 (NEAR J102)	22AWG WHT	523999	3"	CHANNEL 03 OUT HI
45	SPLICE 15 (NEAR J102)	J200-T 602200	20AWG WHT	520999	40"	CHANNEL 03 OUT HI
46	J103-1 602199-001	SPLICE 16 (NEAR J103)	22AWG WHT	523999	3"	CHANNEL 03 OUT LO
47	J103-2 602199-001	SPLICE 16 (NEAR J103)	22AWG WHT	523999	3"	CHANNEL 03 OUT LO
48	SPLICE 16 (NEAR J103)	J200-Y 602200	20AWG WHT	520999	40"	CHANNEL 03 OUT LO
49	J103-3 602199-001	SPLICE 17 (NEAR J103)	22AWG WHT	523999	3"	CHANNEL 04 IN HI
50	J103-4 602199-001	SPLICE 17 (NEAR J103)	22AWG WHT	523999	3"	CHANNEL 04 IN HI

ENGINEERING WIRE LIST

WIRE	FROM	TO	TYPE	PART #	WIRE LEN	REFERENCE
51	SPLICE 17 (NEAR J103)	J200-U 602200	20AWG WHT	520999	40"	CHANNEL 04 IN HI
52	J103-5 602199-001	SPLICE 18 (NEAR J103)	22AWG WHT	523999	3"	CHANNEL 04 IN LO
53	J103-6 602199-001	SPLICE 18 (NEAR J103)	22AWG WHT	523999	3"	CHANNEL 04 IN LO
54	SPLICE 18 (NEAR J103)	J200-X 602200	20AWG WHT	520999	40"	CHANNEL 04 IN LO
55	J103-7 602199-001	SPLICE 19 (NEAR J103)	22AWG WHT	523999	3"	CHANNEL 04 OUT HI
56	J103-8 602199-001	SPLICE 19 (NEAR J103)	22AWG WHT	523999	3"	CHANNEL 04 OUT HI
57	SPLICE 19 (NEAR J103)	J200-W 602200	20AWG WHT	520999	40"	CHANNEL 04 OUT HI
58	J103-9 602199-001	SPLICE 20 (NEAR J103)	22AWG WHT	523999	3"	CHANNEL 04 OUT LO
59	J103-10 602199-001	SPLICE 20 (NEAR J103)	22AWG WHT	523999	3"	CHANNEL 04 OUT LO
60	SPLICE 20 (NEAR J103)	J200-e 602200	20AWG WHT	520999	40"	CHANNEL 04 OUT LO
61	J104-1 602199-001	SPLICE 21 (NEAR J104)	22AWG WHT	523999	3"	CHANNEL 05 IN HI
62	J104-2 602199-001	SPLICE 21 (NEAR J104)	22AWG WHT	523999	3"	CHANNEL 05 IN HI
63	SPLICE 21 (NEAR J104)	J200-V 602200	20AWG WHT	520999	40"	CHANNEL 05 IN HI
64	J104-3 602199-001	SPLICE 22 (NEAR J104)	22AWG WHT	523999	3"	CHANNEL 05 IN LO
65	J104-4 602199-001	SPLICE 22 (NEAR J104)	22AWG WHT	523999	3"	CHANNEL 05 IN LO
66	SPLICE 22 (NEAR J104)	J200-R 602200	20AWG WHT	520999	40"	CHANNEL 05 IN LO
67	J104-5 602199-001	SPLICE 23 (NEAR J104)	22AWG WHT	523999	3"	CHANNEL 05 OUT HI
68	J104-6 602199-001	SPLICE 23 (NEAR J104)	22AWG WHT	523999	3"	CHANNEL 05 OUT HI
69	SPLICE 23 (NEAR J104)	J200-a 602200	20AWG WHT	520999	40"	CHANNEL 05 OUT HI
70	J104-7 602199-001	SPLICE 24 (NEAR J104)	22AWG WHT	523999	3"	CHANNEL 05 OUT LO
71	J104-8 602199-001	SPLICE 24 (NEAR J104)	22AWG WHT	523999	3"	CHANNEL 05 OUT LO
72	SPLICE 24 (NEAR J104)	J200-Z 602200	20AWG WHT	520999	40"	CHANNEL 05 OUT LO
73	J104-9 602199-001	SPLICE 25 (NEAR J104)	22AWG WHT	523999	3"	CHANNEL 06 IN HI
74	J104-10 602199-001	SPLICE 25 (NEAR J104)	22AWG WHT	523999	3"	CHANNEL 06 IN HI
75	SPLICE 25 (NEAR J104)	J200-b 602200	20AWG WHT	520999	40"	CHANNEL 06 IN HI

ENGINEERING WIRE LIST

WIRE	FROM	TO	TYPE	PART #	WIRE LEN	REFERENCE
76	J105-1 602199-001	SPLICE 26 (NEAR J105)	22AWG WHT	523999	3"	CHANNEL 06 IN LO
77	J105-2 602199-001	SPLICE 26 (NEAR J105)	22AWG WHT	523999	3"	CHANNEL 06 IN LO
78	SPLICE 26 (NEAR J105)	J200-c 602200	20AWG WHT	520999	40"	CHANNEL 06 IN LO
79	J105-3 602199-001	SPLICE 27 (NEAR J105)	22AWG WHT	523999	3"	CHANNEL 06 OUT HI
80	J105-4 602199-001	SPLICE 27 (NEAR J105)	22AWG WHT	523999	3"	CHANNEL 06 OUT HI
81	SPLICE 27 (NEAR J105)	J200-j 602200	20AWG WHT	520999	40"	CHANNEL 06 OUT HI
82	J105-5 602199-001	SPLICE 28 (NEAR J105)	22AWG WHT	523999	3"	CHANNEL 06 OUT LO
83	J105-6 602199-001	SPLICE 28 (NEAR J105)	22AWG WHT	523999	3"	CHANNEL 06 OUT LO
84	SPLICE 28 (NEAR J105)	J200-d 602200	20AWG WHT	520999	40"	CHANNEL 06 OUT LO
85	J105-7 602199-001	SPLICE 29 (NEAR J105)	22AWG WHT	523999	3"	CHANNEL 07 IN HI
86	J105-8 602199-001	SPLICE 29 (NEAR J105)	22AWG WHT	523999	3"	CHANNEL 07 IN HI
87	SPLICE 29 (NEAR J105)	J200-m 602200	20AWG WHT	520999	40"	CHANNEL 07 IN HI
88	J105-9 602199-001	SPLICE 30 (NEAR J105)	22AWG WHT	523999	3"	CHANNEL 07 IN LO
89	J105-10 602199-001	SPLICE 30 (NEAR J105)	22AWG WHT	523999	3"	CHANNEL 07 IN LO
90	SPLICE 30 (NEAR J105)	J200-n 602200	20AWG WHT	520999	40"	CHANNEL 07 IN LO
91	J106-1 602199-001	SPLICE 31 (NEAR J106)	22AWG WHT	523999	3"	CHANNEL 07 OUT HI
92	J106-2 602199-001	SPLICE 31 (NEAR J106)	22AWG WHT	523999	3"	CHANNEL 07 OUT HI
93	SPLICE 31 (NEAR J106)	J200-v 602200	20AWG WHT	520999	40"	CHANNEL 07 OUT HI
94	J106-3 602199-001	SPLICE 32 (NEAR J106)	22AWG WHT	523999	3"	CHANNEL 07 OUT LO
95	J106-4 602199-001	SPLICE 32 (NEAR J106)	22AWG WHT	523999	3"	CHANNEL 07 OUT LO
96	SPLICE 32 (NEAR J106)	J200-h 602200	20AWG WHT	520999	40"	CHANNEL 07 OUT LO
97	J106-5 602199-001	SPLICE 33 (NEAR J106)	22AWG WHT	523999	3"	CHANNEL 08 IN HI
98	J106-6 602199-001	SPLICE 33 (NEAR J106)	22AWG WHT	523999	3"	CHANNEL 08 IN HI
99	SPLICE 33 (NEAR J106)	J200-p 602200	20AWG WHT	520999	40"	CHANNEL 08 IN HI
100	J106-7 602199-001	SPLICE 34 (NEAR J106)	22AWG WHT	523999	3"	CHANNEL 08 IN LO

ENGINEERING WIRE LIST

WIRE	FROM	TO	TYPE	PART #	WIRE LEN	REFERENCE
101	J106-8 602199-001	SPLICE 34 (NEAR J106)	22AWG WHT	523999	3"	CHANNEL 08 IN LO
102	SPLICE 34 (NEAR J106)	J200-f 602200	20AWG WHT	520999	40"	CHANNEL 08 IN LO
103	J106-9 602199-001	SPLICE 35 (NEAR J106)	22AWG WHT	523999	3"	CHANNEL 08 OUT HI
104	J106-10 602199-001	SPLICE 35 (NEAR J106)	22AWG WHT	523999	3"	CHANNEL 08 OUT HI
105	SPLICE 35 (NEAR J106)	J200-r 602200	20AWG WHT	520999	40"	CHANNEL 08 OUT HI
106	J107-1 602199-001	SPLICE 36 (NEAR J107)	22AWG WHT	523999	3"	CHANNEL 08 OUT LO
107	J107-2 602199-001	SPLICE 36 (NEAR J107)	22AWG WHT	523999	3"	CHANNEL 08 OUT LO
108	SPLICE 36 (NEAR J107)	J200-k 602200	20AWG WHT	520999	40"	CHANNEL 08 OUT LO
109	J107-3 602199-001	SPLICE 37 (NEAR J107)	22AWG WHT	523999	3"	CHANNEL 09 IN HI
110	J107-4 602199-001	SPLICE 37 (NEAR J107)	22AWG WHT	523999	3"	CHANNEL 09 IN HI
111	SPLICE 37 (NEAR J107)	J200-x 602200	20AWG WHT	520999	40"	CHANNEL 09 IN HI
112	J107-5 602199-001	SPLICE 38 (NEAR J107)	22AWG WHT	523999	3"	CHANNEL 09 IN LO
113	J107-6 602199-001	SPLICE 38 (NEAR J107)	22AWG WHT	523999	3"	CHANNEL 09 IN LO
114	SPLICE 38 (NEAR J107)	J200-t 602200	20AWG WHT	520999	40"	CHANNEL 09 IN LO
115	J107-7 602199-001	SPLICE 39 (NEAR J107)	22AWG WHT	523999	3"	CHANNEL 09 OUT HI
116	J107-8 602199-001	SPLICE 39 (NEAR J107)	22AWG WHT	523999	3"	CHANNEL 09 OUT HI
117	SPLICE 39 (NEAR J107)	J200-s 602200	20AWG WHT	520999	40"	CHANNEL 09 OUT HI
118	J107-9 602199-001	SPLICE 40 (NEAR J107)	22AWG WHT	523999	3"	CHANNEL 09 OUT LO
119	J107-10 602199-001	SPLICE 40 (NEAR J107)	22AWG WHT	523999	3"	CHANNEL 09 OUT LO
120	SPLICE 40 (NEAR J107)	J200-u 602200	20AWG WHT	520999	40"	CHANNEL 09 OUT LO
121	J108-1 602199-001	SPLICE 41 (NEAR J108)	22AWG WHT	523999	3"	CHANNEL 10 IN HI
122	J108-2 602199-001	SPLICE 41 (NEAR J108)	22AWG WHT	523999	3"	CHANNEL 10 IN HI
123	SPLICE 41 (NEAR J108)	J201-A 602200	20AWG WHT	520999	40"	CHANNEL 10 IN HI
124	J108-3 602199-001	SPLICE 42 (NEAR J108)	22AWG WHT	523999	3"	CHANNEL 10 IN LO
125	J108-4 602199-001	SPLICE 42 (NEAR J108)	22AWG WHT	523999	3"	CHANNEL 10 IN LO

ENGINEERING WIRE LIST

WIRE	FROM	TO	TYPE	PART #	WIRE LEN	REFERENCE
126	SPLICE 42 (NEAR J108)	J201-C 602200	20AWG WHT	520999	40"	CHANNEL 10 IN LO
127	J108-5 602199-001	SPLICE 43 (NEAR J108)	22AWG WHT	523999	3"	CHANNEL 10 OUT HI
128	J108-6 602199-001	SPLICE 43 (NEAR J108)	22AWG WHT	523999	3"	CHANNEL 10 OUT HI
129	SPLICE 43 (NEAR J108)	J201-D 602200	20AWG WHT	520999	40"	CHANNEL 10 OUT HI
130	J108-7 602199-001	SPLICE 44 (NEAR J108)	22AWG WHT	523999	3"	CHANNEL 10 OUT LO
131	J108-8 602199-001	SPLICE 44 (NEAR J108)	22AWG WHT	523999	3"	CHANNEL 10 OUT LO
132	SPLICE 44 (NEAR J108)	J201-K 602200	20AWG WHT	520999	40"	CHANNEL 10 OUT LO
133	J108-9 602199-001	SPLICE 45 (NEAR J108)	22AWG WHT	523999	3"	CHANNEL 11 IN HI
134	J108-10 602199-001	SPLICE 45 (NEAR J108)	22AWG WHT	523999	3"	CHANNEL 11 IN HI
135	SPLICE 45 (NEAR J108)	J201-E 602200	20AWG WHT	520999	40"	CHANNEL 11 IN HI
136	J109-1 602199-001	SPLICE 46 (NEAR J109)	22AWG WHT	523999	3"	CHANNEL 11 IN LO
137	J109-2 602199-001	SPLICE 46 (NEAR J109)	22AWG WHT	523999	3"	CHANNEL 11 IN LO
138	SPLICE 46 (NEAR J109)	J201-J 602200	20AWG WHT	520999	40"	CHANNEL 11 IN LO
139	J109-3 602199-001	SPLICE 47 (NEAR J109)	22AWG WHT	523999	3"	CHANNEL 11 OUT HI
140	J109-4 602199-001	SPLICE 47 (NEAR J109)	22AWG WHT	523999	3"	CHANNEL 11 OUT HI
141	SPLICE 47 (NEAR J109)	J201-H 602200	20AWG WHT	520999	40"	CHANNEL 11 OUT HI
142	J109-5 602199-001	SPLICE 48 (NEAR J109)	22AWG WHT	523999	3"	CHANNEL 11 OUT LO
143	J109-6 602199-001	SPLICE 48 (NEAR J109)	22AWG WHT	523999	3"	CHANNEL 11 OUT LO
144	SPLICE 48 (NEAR J109)	J201-L 602200	20AWG WHT	520999	40"	CHANNEL 11 OUT LO
145	J109-7 602199-001	SPLICE 49 (NEAR J109)	22AWG WHT	523999	3"	CHANNEL 12 IN HI
146	J109-8 602199-001	SPLICE 49 (NEAR J109)	22AWG WHT	523999	3"	CHANNEL 12 IN HI
147	SPLICE 49 (NEAR J109)	J201-B 602200	20AWG WHT	520999	40"	CHANNEL 12 IN HI
148	J109-9 602199-001	SPLICE 50 (NEAR J109)	22AWG WHT	523999	3"	CHANNEL 12 IN LO
149	J109-10 602199-001	SPLICE 50 (NEAR J109)	22AWG WHT	523999	3"	CHANNEL 12 IN LO
150	SPLICE 50 (NEAR J109)	J201-M 602200	20AWG WHT	520999	40"	CHANNEL 12 IN LO

ENGINEERING WIRE LIST

WIRE	FROM	TO	TYPE	PART #	WIRE LEN	REFERENCE
151	J110-1 602199-001	SPLICE 51 (NEAR J110)	22AWG WHT	523999	3"	CHANNEL 12 OUT HI
152	J110-2 602199-001	SPLICE 51 (NEAR J110)	22AWG WHT	523999	3"	CHANNEL 12 OUT HI
153	SPLICE 51 (NEAR J110)	J201-F 602200	20AWG WHT	520999	40"	CHANNEL 12 OUT HI
154	J110-3 602199-001	SPLICE 52 (NEAR J110)	22AWG WHT	523999	3"	CHANNEL 12 OUT LO
155	J110-4 602199-001	SPLICE 52 (NEAR J110)	22AWG WHT	523999	3"	CHANNEL 12 OUT LO
156	SPLICE 52 (NEAR J110)	J201-N 602200	20AWG WHT	520999	40"	CHANNEL 12 OUT LO
157	J110-5 602199-001	SPLICE 53 (NEAR J110)	22AWG WHT	523999	3"	CHANNEL 13 IN HI
158	J110-6 602199-001	SPLICE 53 (NEAR J110)	22AWG WHT	523999	3"	CHANNEL 13 IN HI
159	SPLICE 53 (NEAR J110)	J201-P 602200	20AWG WHT	520999	40"	CHANNEL 13 IN HI
160	J110-7 602199-001	SPLICE 54 (NEAR J110)	22AWG WHT	523999	3"	CHANNEL 13 IN LO
161	J110-8 602199-001	SPLICE 54 (NEAR J110)	22AWG WHT	523999	3"	CHANNEL 13 IN LO
162	SPLICE 54 (NEAR J110)	J201-S 602200	20AWG WHT	520999	40"	CHANNEL 13 IN LO
163	J110-9 602199-001	SPLICE 55 (NEAR J110)	22AWG WHT	523999	3"	CHANNEL 13 OUT HI
164	J110-10 602199-001	SPLICE 55 (NEAR J110)	22AWG WHT	523999	3"	CHANNEL 13 OUT HI
165	SPLICE 55 (NEAR J110)	J201-T 602200	20AWG WHT	520999	40"	CHANNEL 13 OUT HI
166	J111-1 602199-001	SPLICE 56 (NEAR J111)	22AWG WHT	523999	3"	CHANNEL 13 OUT LO
167	J111-2 602199-001	SPLICE 56 (NEAR J111)	22AWG WH	523999	3"	CHANNEL 13 OUT LO
168	SPLICE 56 (NEAR J111)	J201-Y 602200	20AWG WHT	520999	40"	CHANNEL 13 OUT LO
169	J111-3 602199-001	SPLICE 57 (NEAR J111)	22AWG WHT	523999	3"	CHANNEL 14 IN HI
170	J111-4 602199-001	SPLICE 57 (NEAR J111)	22AWG WHT	523999	3"	CHANNEL 14 IN HI
171	SPLICE 57 (NEAR J111)	J201-U 602200	20AWG WHT	520999	40"	CHANNEL 14 IN HI
172	J111-5 602199-001	SPLICE 58 (NEAR J111)	22AWG WHT	523999	3"	CHANNEL 14 IN LO
173	J111-6 602199-001	SPLICE 58 (NEAR J111)	22AWG WHT	523999	3"	CHANNEL 14 IN LO
174	SPLICE 58 (NEAR J111)	J201-X 602200	20AWG WHT	520999	40"	CHANNEL 14 IN LO
175	J111-7 602199-001	SPLICE 59 (NEAR J111)	22AWG WHT	523999	3"	CHANNEL 14 OUT HI

ENGINEERING WIRE LIST

WIRE	FROM	TO	TYPE	PART #	WIRE LEN	REFERENCE
176	J111-8 602199-001	SPLICE 59 (NEAR J111)	22AWG WHT	523999	3"	CHANNEL 14 OUT HI
177	SPLICE 59 (NEAR J111)	J201-e 602200	20AWG WHT	520999	40"	CHANNEL 14 OUT HI
178	J111-9 602199-001	SPLICE 60 (NEAR J111)	22AWG WHT	523999	3"	CHANNEL 14 OUT LO
179	J111-10 602199-001	SPLICE 60 (NEAR J111)	22AWG WHT	523999	3"	CHANNEL 14 OUT LO
180	SPLICE 60 (NEAR J111)	J201-W 602200	20AWG WHT	520999	40"	CHANNEL 14 OUT LO
181	J112-1 602199-001	SPLICE 61 (NEAR J112)	22AWG WHT	523999	3"	CHANNEL 15 IN HI
182	J112-2 602199-001	SPLICE 61 (NEAR J112)	22AWG WHT	523999	3"	CHANNEL 15 IN HI
183	SPLICE 61 (NEAR J112)	J201-V 602200	20AWG WHT	520999	40"	CHANNEL 15 IN HI
184	J112-3 602199-001	SPLICE 62 (NEAR J112)	22AWG WHT	523999	3"	CHANNEL 15 IN LO
185	J112-4 602199-001	SPLICE 62 (NEAR J112)	22AWG WHT	523999	3"	CHANNEL 15 IN LO
186	SPLICE 62 (NEAR J112)	J201-R 602200	20AWG WHT	520999	40"	CHANNEL 15 IN LO
187	J112-5 602199-001	SPLICE 63 (NEAR J112)	22AWG WHT	523999	3"	CHANNEL 15 OUT HI
188	J112-6 602199-001	SPLICE 63 (NEAR J112)	22AWG WHT	523999	3"	CHANNEL 15 OUT HI
189	SPLICE 63 (NEAR J112)	J201-a 602200	20AWG WHT	520999	40"	CHANNEL 15 OUT HI
190	J112-7 602199-001	SPLICE 64 (NEAR J112)	22AWG WHT	523999	3"	CHANNEL 15 OUT LO
191	J112-8 602199-001	SPLICE 64 (NEAR J112)	22AWG WHT	523999	3"	CHANNEL 15 OUT LO
192	SPLICE 64 (NEAR J112)	J201-Z 602200	20AWG WHT	520999	40"	CHANNEL 15 OUT LO
193	J112-9 602199-001	SPLICE 65 (NEAR J112)	22AWG WHT	523999	3"	CHANNEL 16 IN HI
194	J112-10 602199-001	SPLICE 65 (NEAR J112)	22AWG WHT	523999	3"	CHANNEL 16 IN HI
195	SPLICE 65 (NEAR J112)	J201-b 602200	20AWG WHT	520999	40"	CHANNEL 16 IN HI
196	J113-1 602199-001	SPLICE 66 (NEAR J113)	22AWG WHT	523999	3"	CHANNEL 16 IN LO
197	J113-2 602199-001	SPLICE 66 (NEAR J113)	22AWG WHT	523999	3"	CHANNEL 16 IN LO
198	SPLICE 66 (NEAR J113)	J201-c 602200	20AWG WHT	520999	40"	CHANNEL 16 IN LO
299	J113-3 602199-001	SPLICE 67 (NEAR J113)	22AWG WHT	523999	3"	CHANNEL 16 OUT HI
200	J113-4 602199-001	SPLICE 67 (NEAR J113)	22AWG WHT	523999	3"	CHANNEL 16 OUT HI

ENGINEERING WIRE LIST

WIRE	FROM	TO	TYPE	PART #	WIRE LEN	REFERENCE
201	SPLICE 67 (NEAR J113)	J201-j 602200	20AWG WHT	520999	40"	CHANNEL 16 OUT HI
202	J113-5 602199-001	SPLICE 68 (NEAR J113)	22AWG WHT	523999	3"	CHANNEL 16 OUT LO
203	J113-6 602199-001	SPLICE 68 (NEAR J113)	22AWG WHT	523999	3"	CHANNEL 16 OUT LO
204	SPLICE 68 (NEAR J113)	J201-d 602200	20AWG WHT	520999	40"	CHANNEL 16 OUT LO
205	J113-7 602199-001	SPLICE 69 (NEAR J113)	22AWG WHT	523999	3"	CHANNEL 17 IN HI
206	J113-8 602199-001	SPLICE 69 (NEAR J113)	22AWG WHT	523999	3"	CHANNEL 17 IN HI
207	SPLICE 69 (NEAR J113)	J201-m 602200	20AWG WHT	520999	40"	CHANNEL 17 IN HI
208	J113-9 602199-001	SPLICE 70 (NEAR J113)	22AWG WHT	523999	3"	CHANNEL 17 IN LO
209	J113-10 602199-001	SPLICE 70 (NEAR J113)	22AWG WHT	523999	3"	CHANNEL 17 IN LO
210	SPLICE 70 (NEAR J113)	J201-n 602200	20AWG WHT	520999	40"	CHANNEL 17 IN LO
211	J114-1 602199-001	SPLICE 71 (NEAR J114)	22AWG WHT	523999	3"	CHANNEL 17 OUT HI
212	J114-2 602199-001	SPLICE 71 (NEAR J114)	22AWG WHT	523999	3"	CHANNEL 17 OUT HI
213	SPLICE 71 (NEAR J114)	J201-v 602200	20AWG WHT	520999	40"	CHANNEL 17 OUT HI
214	J114-3 602199-001	SPLICE 72 (NEAR J114)	22AWG WHT	523999	3"	CHANNEL 17 OUT LO
215	J114-4 602199-001	SPLICE 72 (NEAR J114)	22AWG WHT	523999	3"	CHANNEL 17 OUT LO
216	SPLICE 72 (NEAR J114)	J201-h 602200	20AWG WHT	520999	40"	CHANNEL 17 OUT LO
217	J114-5 602199-001	SPLICE 73 (NEAR J114)	22AWG WHT	523999	3"	CHANNEL 18 IN HI
218	J114-6 602199-001	SPLICE 73 (NEAR J114)	22AWG WHT	523999	3"	CHANNEL 18 IN HI
219	SPLICE 73 (NEAR J114)	J201-p 602200	20AWG WHT	520999	40"	CHANNEL 18 IN HI
220	J114-7 602199-001	SPLICE 74 (NEAR J114)	22AWG WHT	523999	3"	CHANNEL 18 IN LO
221	J114-8 602199-001	SPLICE 74 (NEAR J114)	22AWG WHT	523999	3"	CHANNEL 18 IN LO
222	SPLICE 74 (NEAR J114)	J201-f 602200	20AWG WHT	520999	40"	CHANNEL 18 IN LO
223	J114-9 602199-001	SPLICE 75 (NEAR J114)	22AWG WHT	523999	3"	CHANNEL 18 OUT HI
224	J114-10 602199-001	SPLICE 75 (NEAR J114)	22AWG WHT	523999	3"	CHANNEL 18 OUT HI
225	SPLICE 75 (NEAR J114)	J201-r 602200	20AWG WHT	520999	40"	CHANNEL 18 OUT HI

ENGINEERING WIRE LIST

WIRE	FROM	TO	TYPE	PART #	WIRE LEN	REFERENCE
226	J115-1 602199-001	SPLICE 76 (NEAR J115)	22AWG WHT	523999	3"	CHANNEL 18 OUT LO
227	J115-2 602199-001	SPLICE 76 (NEAR J115)	22AWG WHT	523999	3"	CHANNEL 18 OUT LO
228	SPLICE 76 (NEAR J115)	J201-k 602200	20AWG WHT	520999	40"	CHANNEL 18 OUT LO
229	J115-3 602199-001	SPLICE 77 (NEAR J115)	22AWG WHT	523999	3"	CHANNEL 19 IN HI
230	J115-4 602199-001	SPLICE 77 (NEAR J115)	22AWG WHT	523999	3"	CHANNEL 19 IN HI
231	SPLICE 77 (NEAR J115)	J201-x 602200	20AWG WHT	520999	40"	CHANNEL 19 IN HI
232	J115-5 602199-001	SPLICE 78 (NEAR J115)	22AWG WHT	523999	3"	CHANNEL 19 IN LO
233	J115-6 602199-001	SPLICE 78 (NEAR J115)	22AWG WHT	523999	3"	CHANNEL 19 IN LO
234	SPLICE 78 (NEAR J115)	J201-t 602200	20AWG WHT	520999	40"	CHANNEL 19 IN LO
235	J115-7 602199-001	SPLICE 79 (NEAR J115)	22AWG WHT	523999	3"	CHANNEL 19 OUT HI
236	J115-8 602199-001	SPLICE 79 (NEAR J115)	22AWG WHT	523999	3"	CHANNEL 19 OUT HI
237	SPLICE 79 (NEAR J115)	J201-s 602200	20AWG WHT	520999	40"	CHANNEL 19 OUT HI
238	J115-9 602199-001	SPLICE 80 (NEAR J115)	22AWG WHT	523999	3"	CHANNEL 19 OUT LO
239	J115-10 602199-001	SPLICE 80 (NEAR J115)	22AWG WHT	523999	3"	CHANNEL 19 OUT LO
240	SPLICE 80 (NEAR J115)	J201-u 602200	20AWG WHT	520999	40"	CHANNEL 19 OUT LO
241	J116-1 602199-001	J200-w 602200	20 AWG WHT	520999	40"	CHASSIS GND
242	J116-2 602199-001	J201-w 602200	20AWG WHT	520999	40"	CHASSIS GND
243	J116-3 602199-001	NO CONNECT				
244	J116-4 602199-001	NO CONNECT				
245	J116-5 602199-001	NO CONNECT				
246	J116-6 602199-001	NO CONNECT				
247	J116-7 602199-001	NO CONNECT				
248	J116-8 602199-001	NO CONNECT				
249	J116-9 602199-001	NO CONNECT				
250	J116-10 602199-001	NO CONNECT				

RACAL Instruments, Inc., 4 Goodyear St., Irvine, CA 92718

DOCUMENT TITLE	SIZE	CODE NO.	DOCUMENT NO.	REV
HARNESS ASSY, 1260-20, TTI	A	21793	407277-005	B
	DRN		SHEET 13 of 13	

DOC. NO. 407277-005

PROPRIETARY NOTICE

THIS DOCUMENT AND THE TECHNICAL DATA HEREON DISCLOSED ARE PROPRIETARY TO RACAL INSTRUMENTS INC. AND SHALL NOT, WITHOUT THE EXPRESS WRITTEN PERMISSION OF RACAL INSTRUMENTS INC. BE USED, RELEASED OR DISCLOSED IN WHOLE OR IN PART, OR USED TO SOLICIT QUOTATION FROM A COMPETITIVE SOURCE OR USED FOR MANUFACTURE BY ANYONE OTHER THAN RACAL INSTRUMENTS INC. THE INFORMATION HEREON HAS BEEN DEVELOPED AT PRIVATE EXPENSE, AND MAY ONLY BE USED FOR PURPOSES OF ENGINEERING EVALUATION AND FOR INCORPORATION INTO TECHNICAL SPECIFICATIONS AND OTHER DOCUMENTS WHICH SPECIFY PROCUREMENT OF PRODUCTS FROM RACAL INSTRUMENTS INC.

NOTES:

1. SEE WIRE LIST FOR CONTACT ASSIGNMENTS AND CONNECTIONS.

△2 WHITE INK STAMP J--- APPROXIMATELY WHERE SHOWN.

△3 MARK SIGNAL NAME ON APPROPRIATE SIZE SHRINK TUBING APPROXIMATELY WHERE SHOWN. SEE TABULATION.

△4 SPRAY PROTECTIVE COATING (ITEM 7) AFTER MARKING.

5. CONNECTORS J100-J181 WILL LATER INSTALL IN RECEIVER BLOCK, TTI P/N VGRCB-32CP. MATING ITA CONNECTOR BLOCK IS TTI P/N VGFCB-32CP. MATING ITA PIN IS RII P/N 602228.

△6 MARK 407277-008 ON APPROPRIATE SIZE SHRINK TUBING APPROXIMATELY WHERE SHOWN. PLACE APPROPRIATE SIZE CLEAR SHRINK TUBING OVER MARKING.

REVISIONS				
ZONE	REV	DESCRIPTION	DATE	APPROVED
		RELEASED PER DRN NO.		
		REVISED PER EO NO.		
		REVISED PER EO NO.		
		REVISED PER EO NO.		

FROM	SIG. NAME	FROM	SIG. NAME	FROM	SIG. NAME	FROM	SIG. NAME
J200-A	CH00 IN HI	J200-V	CH05 IN HI	J200-w	CHAS GROUND	J201-W	CH14 OUT LO
J200-C	CH00 IN LO	J200-R	CH05 IN LO	J201-A	CH10 IN HI	J201-V	CH15 IN HI
J200-D	CH00 OUT HI	J200-a	CH05 OUT HI	J201-C	CH10 IN LO	J201-R	CH15 IN LO
J200-K	CH00 OUT LO	J200-Z	CH05 OUT LO	J201-D	CH10 OUT HI	J201-a	CH15 OUT HI
J200-E	CH01 IN HI	J200-b	CH06 IN HI	J201-K	CH10 OUT LO	J201-Z	CH15 OUT LO
J200-J	CH01 IN LO	J200-c	CH06 IN LO	J201-E	CH11 IN HI	J201-b	CH16 IN HI
J200-H	CH01 OUT HI	J200-J	CH06 OUT HI	J201-J	CH11 IN LO	J201-c	CH16 IN LO
J200-L	CH01 OUT LO	J200-d	CH06 OUT LO	J201-H	CH11 OUT HI	J201-J	CH16 OUT HI
J200-B	CH02 IN HI	J200-m	CH07 IN HI	J201-L	CH11 OUT LO	J201-d	CH16 OUT LO
J200-M	CH02 IN LO	J200-n	CH07 IN LO	J201-B	CH12 IN HI	J201-m	CH17 IN HI
J200-F	CH02 OUT HI	J200-v	CH07 OUT HI	J201-M	CH12 IN LO	J201-n	CH17 IN LO
J200-N	CH02 OUT LO	J200-h	CH07 OUT LO	J201-F	CH12 OUT HI	J201-v	CH17 OUT HI
J200-P	CH03 IN HI	J200-p	CH08 IN HI	J201-N	CH12 OUT LO	J201-h	CH17 OUT LO
J200-S	CH03 IN LO	J200-f	CH08 IN LO	J201-P	CH13 IN HI	J201-p	CH18 IN HI
J200-T	CH03 OUT HI	J200-r	CH08 OUT HI	J201-S	CH13 IN LO	J201-f	CH18 IN LO
J200-Y	CH03 OUT LO	J200-k	CH08 OUT LO	J201-T	CH13 OUT HI	J201-r	CH18 OUT HI
J200-U	CH04 IN HI	J200-x	CH09 IN HI	J201-Y	CH13 OUT LO	J201-k	CH18 OUT LO
J200-X	CH04 IN LO	J200-t	CH09 IN LO	J201-U	CH14 IN HI	J201-x	CH19 IN HI
J200-W	CH04 OUT HI	J200-s	CH09 OUT HI	J201-X	CH14 IN LO	J201-t	CH19 IN LO
J200-e	CH04 OUT LO	J200-u	CH09 OUT LO	J201-e	CH14 OUT HI	J201-s	CH19 OUT HI
						J201-u	CH19 OUT LO
						J201-w	CHAS GROUND

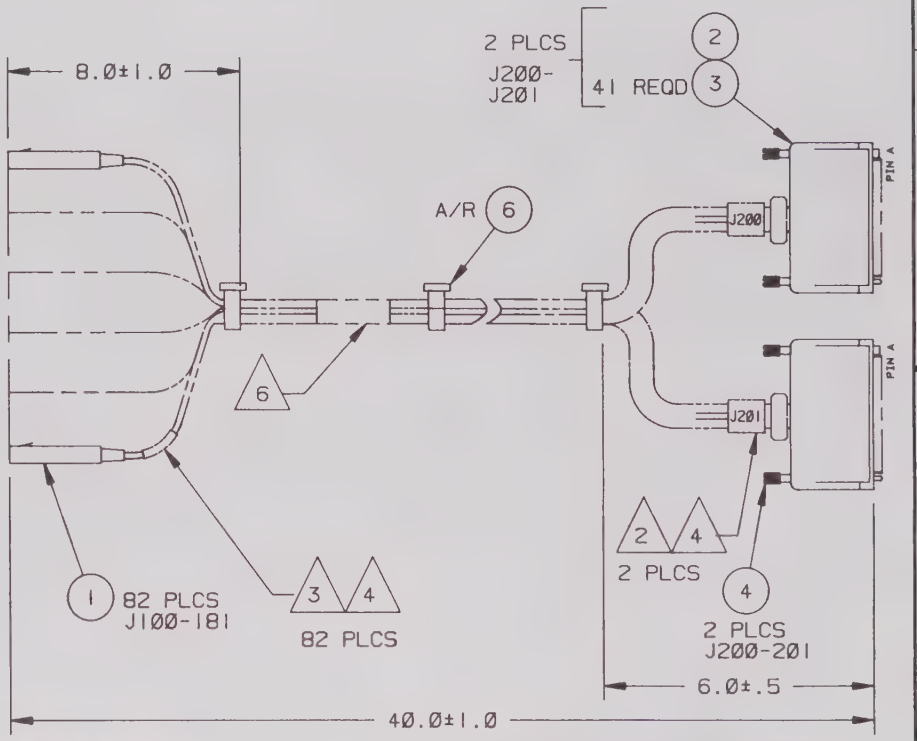

PRECIOUS METAL INDICATOR CODE							
WEIGHTS							
STRESS							
MATERIALS & PROCESSES							
QUALITY ASSURANCE	2/6/95						
MANUFACTURING ENGRG	2/02/95						FREEDOM
ADDITIONAL APPROVALS	DATE	PART DASH NO.	NEXT QTY REQ'D	FINAL PER ASSY	NEXT ASSY	USED ON	
					APPLICATION		

UNLESS OTHERWISE SPECIFIED DIMENSIONS ARE IN INCHES TOLERANCES ARE :
ANGLES DECIMALS .XX ± .02 .XXX ± .010 MOLD ± .004 -.001
DO NOT SCALE DRAWING
MATERIAL:
FINISH:
SIMILAR TO SPECIAL MARKING SYM.

CONTRACT NO.

APPROVALS	DATE
DRAWN ARVETTA S	94-10-20
CHECKED	95 2-7
ENGR	75-4-'
DESIGN ACTIVITY	

RACAL Instruments, Inc.
4 Goodyear St., Irvine, CA. 92718-2002

TITLE
HARNESS ASSY, 1260-20, TTI

SIZE	CAGE CODE	DWG NO.	REV.
B	21793	407277-008	A

SCALE NONE | CALC. WT | ACT. WT | SHEET 1 OF 10

980340 REV. F

ENGINEERING PARTS LIST

ITEM	BIN	PART NO.	DESCRIPTION	QTY	REFERENCE
1		602196-901	CONTACT,PWR,MINI,20A,TTI	82	J100-J181
2		601850	CON-CAB-RCP41PC.	2	J200-J201
3		602200	CONTACT,CRIMP,RECPT,24-20GA	82	W/J200-J201
4		611376	JACKSCRW,SHORT TURN,GMCT	2	W/J200-J201
5		520999	WRTEF-STR20G-9-9-9	A/R	
6		610777	TIE-CA-LKG-.064-.075	A/R	
7		910541	POLYURETHANE CONF. COAT	A/R	

RACAL Instruments, Inc., 4 Goodyear St., Irvine, CA 92718

DOCUMENT TITLE	SIZE	CODE NO.	DOCUMENT NO.	REV
HARNESS ASSEMBLY, 1260-20, TTI	A	21793	407277-008	A
	DRN		SHEET 2 of 10	

DOC. NO. 407277-008

ENGINEERING WIRE LIST

WIRE	FROM	TO	TYPE	PART #	WIRE LEN	REFERENCE
	BLK AAx PN 01 (J100)	Uxx-SLOT yy (J200)	CABLE	407277-008		SYSTEM WIRE LIST
	BLK AAx PN 02 (J101)	Uxx-SLOT yy (J200)	CABLE	407277-008		
	BLK AAx PN 03 (J102)	Uxx-SLOT yy (J200)	CABLE	407277-008		
	BLK AAx PN 04 (J103)	Uxx-SLOT yy (J200)	CABLE	407277-008		
	BLK AAx PN 05 (J104)	Uxx-SLOT yy (J200)	CABLE	407277-008		
	BLK AAx PN 06 (J105)	Uxx-SLOT yy (J200)	CABLE	407277-008		
	BLK AAx PN 07 (J106)	Uxx-SLOT yy (J200)	CABLE	407277-008		
	BLK AAx PN 08 (J107)	Uxx-SLOT yy (J200)	CABLE	407277-008		
	BLK AAx PN 09 (J108)	Uxx-SLOT yy (J200)	CABLE	407277-008		
	BLK AAx PN 10 (J109)	Uxx-SLOT yy (J200)	CABLE	407277-008		
	BLK AAx PN 11 (J110)	Uxx-SLOT yy (J200)	CABLE	407277-008		
	BLK AAx PN 12 (J111)	Uxx-SLOT yy (J200)	CABLE	407277-008		
	BLK AAx PN 13 (J112)	Uxx-SLOT yy (J200)	CABLE	407277-008		
	BLK AAx PN 14 (J113)	Uxx-SLOT yy (J200)	CABLE	407277-008		
	BLK AAx PN 15 (J114)	Uxx-SLOT yy (J200)	CABLE	407277-008		
	BLK AAx PN 16 (J115)	Uxx-SLOT yy (J200)	CABLE	407277-008		
	BLK AAx PN 17 (J116)	Uxx-SLOT yy (J200)	CABLE	407277-008		
	BLK AAx PN 18 (J117)	Uxx-SLOT yy (J200)	CABLE	407277-008		
	BLK AAx PN 19 (J118)	Uxx-SLOT yy (J200)	CABLE	407277-008		
	BLK AAx PN 20 (J119)	Uxx-SLOT yy (J200)	CABLE	407277-008		
	BLK AAx PN 21 (J120)	Uxx-SLOT yy (J200)	CABLE	407277-008		
	BLK AAx PN 22 (J121)	Uxx-SLOT yy (J200)	CABLE	407277-008		
	BLK AAx PN 23 (J122)	Uxx-SLOT yy (J200)	CABLE	407277-008		
	BLK AAx PN 24 (J123)	Uxx-SLOT yy (J200)	CABLE	407277-008		
	BLK AAx PN 25 (J124)	Uxx-SLOT yy (J200)	CABLE	407277-008		

ENGINEERING WIRE LIST

WIRE	FROM	TO	TYPE	PART #	WIRE LEN	REFERENCE
	BLK AAx PN 26 (J125)	Uxx-SLOT yy (J200)	CABLE	407277-008		
	BLK AAx PN 27 (J126)	Uxx-SLOT yy (J200)	CABLE	407277-008		
	BLK AAx PN 28 (J127)	Uxx-SLOT yy (J200)	CABLE	407277-008		
	BLK AAx PN 29 (J128)	Uxx-SLOT yy (J200)	CABLE	407277-008		
	BLK AAx PN 30 (J129)	Uxx-SLOT yy (J200)	CABLE	407277-008		
	BLK AAx PN 31 (J130)	Uxx-SLOT yy (J200)	CABLE	407277-008		
	BLK AAx PN 32 (J131)	Uxx-SLOT yy (J200)	CABLE	407277-008		
	BLK AAx PN 33 (J132)	Uxx-SLOT yy (J200)	CABLE	407277-008		
	BLK AAx PN 34 (J133)	Uxx-SLOT yy (J200)	CABLE	407277-008		
	BLK AAx PN 35 (J134)	Uxx-SLOT yy (J200)	CABLE	407277-008		
	BLK AAx PN 36 (J135)	Uxx-SLOT yy (J200)	CABLE	407277-008		
	BLK AAx PN 37 (J136)	Uxx-SLOT yy (J200)	CABLE	407277-008		
	BLK AAx PN 38 (J137)	Uxx-SLOT yy (J200)	CABLE	407277-008		
	BLK AAx PN 39 (J138)	Uxx-SLOT yy (J200)	CABLE	407277-008		
	BLK AAx PN 40 (J139)	Uxx-SLOT yy (J200)	CABLE	407277-008		
	BLK AAx PN 41 (J140)	Uxx-SLOT yy (J200)	CABLE	407277-008		
	BLK AAx PN 42 (J141)	Uxx-SLOT yy (J201)	CABLE	407277-008		
	BLK AAx PN 43 (J142)	Uxx-SLOT yy (J201)	CABLE	407277-008		
	BLK AAx PN 44 (J143)	Uxx-SLOT yy (J201)	CABLE	407277-008		
	BLK AAx PN 45 (J144)	Uxx-SLOT yy (J201)	CABLE	407277-008		
	BLK AAx PN 46 (J145)	Uxx-SLOT yy (J201)	CABLE	407277-008		
	BLK AAx PN 47 (J146)	Uxx-SLOT yy (J201)	CABLE	407277-008		
	BLK AAx PN 48 (J147)	Uxx-SLOT yy (J201)	CABLE	407277-008		
	BLK AAx PN 49 (J148)	Uxx-SLOT yy (J201)	CABLE	407277-008		
	BLK AAx PN 50 (J149)	Uxx-SLOT yy (J201)	CABLE	407277-008		

ENGINEERING WIRE LIST

WIRE	FROM	TO	TYPE	PART #	WIRE LEN	REFERENCE
	BLK AAx PN 51 (J150)	Uxx-SLOT yy (J201)	CABLE	407277-008		
	BLK AAx PN 52 (J151)	Uxx-SLOT yy (J201)	CABLE	407277-008		
	BLK AAx PN 53 (J152)	Uxx-SLOT yy (J201)	CABLE	407277-008		
	BLK AAx PN 54 (J153)	Uxx-SLOT yy (J201)	CABLE	407277-008		
	BLK AAx PN 55 (J154)	Uxx-SLOT yy (J201)	CABLE	407277-008		
	BLK AAx PN 56 (J155)	Uxx-SLOT yy (J201)	CABLE	407277-008		
	BLK AAx PN 57 (J156)	Uxx-SLOT yy (J201)	CABLE	407277-008		
	BLK AAx PN 58 (J157)	Uxx-SLOT yy (J201)	CABLE	407277-008		
	BLK AAx PN 59 (J158)	Uxx-SLOT yy (J201)	CABLE	407277-008		
	BLK AAx PN 60 (J159)	Uxx-SLOT yy (J201)	CABLE	407277-008		
	BLK AAx PN 61 (J160)	Uxx-SLOT yy (J201)	CABLE	407277-008		
	BLK AAx PN 62 (J161)	Uxx-SLOT yy (J201)	CABLE	407277-008		
	BLK AAx PN 63 (J162)	Uxx-SLOT yy (J201)	CABLE	407277-008		
	BLK AAx PN 64 (J163)	Uxx-SLOT yy (J201)	CABLE	407277-008		
	BLK AAx PN 65 (J164)	Uxx-SLOT yy (J201)	CABLE	407277-008		
	BLK AAx PN 66 (J165)	Uxx-SLOT yy (J201)	CABLE	407277-008		
	BLK AAx PN 67 (J166)	Uxx-SLOT yy (J201)	CABLE	407277-008		
	BLK AAx PN 68 (J167)	Uxx-SLOT yy (J201)	CABLE	407277-008		
	BLK AAx PN 69 (J168)	Uxx-SLOT yy (J201)	CABLE	407277-008		
	BLK AAx PN 70 (J169)	Uxx-SLOT yy (J201)	CABLE	407277-008		
	BLK AAx PN 71 (J170)	Uxx-SLOT yy (J201)	CABLE	407277-008		
	BLK AAx PN 72 (J171)	Uxx-SLOT yy (J201)	CABLE	407277-008		
	BLK AAx PN 73 (J172)	Uxx-SLOT yy (J201)	CABLE	407277-008		
	BLK AAx PN 74 (J173)	Uxx-SLOT yy (J201)	CABLE	407277-008		
	BLK AAx PN 75 (J174)	Uxx-SLOT yy (J201)	CABLE	407277-008		

ENGINEERING WIRE LIST

WIRE	FROM	TO	TYPE	PART #	WIRE LEN	REFERENCE
	BLK AAx PN 76 (J175)	Uxx-SLOT yy (J201)	CABLE	407277-008		
	BLK AAx PN 77 (J176)	Uxx-SLOT yy (J201)	CABLE	407277-008		
	BLK AAx PN 78 (J177)	Uxx-SLOT yy (J201)	CABLE	407277-008		
	BLK AAx PN 79 (J178)	Uxx-SLOT yy (J201)	CABLE	407277-008		
	BLK AAx PN 80 (J179)	Uxx-SLOT yy (J201)	CABLE	407277-008		
	BLK AAx PN 81 (J180)	Uxx-SLOT yy (J201)	CABLE	407277-008		
	BLK AAx PN 82 (J181)	Uxx-SLOT yy (J201)	CABLE	407277-008		

This system wirelist serves as a template for incorporating this harness assembly into the overall system wirelist. It does not in any way affect the fabrication of this harness assembly.

ENGINEERING WIRE LIST

WIRE	FROM	TO	TYPE	PART #	WIRE LEN	REFERENCE
1	J100 602196-901	J200-A 602200	20 AWG WHT	520999	40"	CH00 IN HI
2	J101 602196-901	J200-C 602200	20 AWG WHT	520999	40"	CH00 IN LO
3	J102 602196-901	J200-D 602200	20 AWG WHT	520999	40"	CH00 OUT HI
4	J103 602196-901	J200-K 602200	20 AWG WHT	520999	40"	CH00 OUT LO
5	J104 602196-901	J200-E 602200	20 AWG WHT	520999	40"	CH01 IN HI
6	J105 602196-901	J200-J 602200	20 AWG WHT	520999	40"	CH01 IN LO
7	J106 602196-901	J200-H 602200	20 AWG WHT	520999	40"	CH01 OUT HI
8	J107 602196-901	J200-L 602200	20 AWG WHT	520999	40"	CH01 OUT LO
9	J108 602196-901	J200-B 602200	20 AWG WHT	520999	40"	CH02 IN HI
10	J109 602196-901	J200-M 602200	20 AWG WHT	520999	40"	CH02 IN LO
11	J110 602196-901	J200-F 602200	20 AWG WHT	520999	40"	CH02 OUT HI
12	J111 602196-901	J200-N 602200	20 AWG WHT	520999	40"	CH02 OUT LO
13	J112 602196-901	J200-P 602200	20 AWG WHT	520999	40"	CH03 IN HI
14	J113 602196-901	J200-S 602200	20 AWG WHT	520999	40"	CH03 IN LO
15	J114 602196-901	J200-T 602200	20 AWG WHT	520999	40"	CH03 OUT HI
16	J115 602196-901	J200-Y 602200	20 AWG WHT	520999	40"	CH03 OUT LO
17	J116 602196-901	J200-U 602200	20 AWG WHT	520999	40"	CH04 IN HI
18	J117 602196-901	J200-X 602200	20 AWG WHT	520999	40"	CH04 IN LO
19	J118 602196-901	J200-W 602200	20 AWG WHT	520999	40"	CH04 OUT HI
20	J119 602196-901	J200-e 602200	20 AWG WHT	520999	40"	CH04 OUT LO
21	J120 602196-901	J200-V 602200	20 AWG WHT	520999	40"	CH05 IN HI
22	J121 602196-901	J200-R 602200	20 AWG WHT	520999	40"	CH05 IN LO
23	J122 602196-901	J200-a 602200	20 AWG WHT	520999	40"	CH05 OUT HI

ENGINEERING WIRE LIST

WIRE	FROM	TO	TYPE	PART #	WIRE LEN	REFERENCE
24	J123 602196-901	J200-Z 602200	20 AWG WHT	520999	40"	CH05 OUT LO
25	J124 602196-901	J200-b 602200	20 AWG WHT	520999	40"	CH06 IN HI
26	J125 602196-901	J200-c 602200	20 AWG WHT	520999	40"	CH06 IN LO
27	J126 602196-901	J200-j 602200	20 AWG WHT	520999	40"	CH06 OUT HI
28	J127 602196-901	J200-d 602200	20 AWG WHT	520999	40"	CH06 OUT LO
29	J128 602196-901	J200-m 602200	20 AWG WHT	520999	40"	CH07 IN HI
30	J129 602196-901	J200-n 602200	20 AWG WHT	520999	40"	CH07 IN LO
31	J130 602196-901	J200-v 602200	20 AWG WHT	520999	40"	CH07 OUT HI
32	J131 602196-901	J200-h 602200	20 AWG WHT	520999	40"	CH07 OUT LO
33	J132 602196-901	J200-p 602200	20 AWG WHT	520999	40"	CH08 IN HI
34	J133 602196-901	J200-f 602200	20 AWG WHT	520999	40"	CH08 IN LO
35	J134 602196-901	J200-r 602200	20 AWG WHT	520999	40"	CH08 OUT HI
36	J135 602196-901	J200-k 602200	20 AWG WHT	520999	40"	CH08 OUT LO
37	J136 602196-901	J200-x 602200	20 AWG WHT	520999	40"	CH09 IN HI
38	J137 602196-901	J200-t 602200	20 AWG WHT	520999	40"	CH09 IN LO
39	J138 602196-901	J200-s 602200	20 AWG WHT	520999	40"	CH09 OUT HI
40	J139 602196-901	J200-u 602200	20 AWG WHT	520999	40"	CH09 OUT LO
41	J140 602196-901	J200-w 602200	20 AWG WHT	520999	40"	CHASSIS GND
42	J141 602196-901	J201-A 602200	20 AWG WHT	520999	40"	CH10 IN HI
43	J142 602196-901	J201-C 602200	20 AWG WHT	520999	40"	CH10 IN LO
44	J143 602196-901	J201-D 602200	20 AWG WHT	520999	40"	CH10 OUT HI
45	J144 602196-901	J201-K 602200	20 AWG WHT	520999	40"	CH10 OUT LO
46	J145 602196-901	J201-E 602200	20 AWG WHT	520999	40"	CH11 IN HI

ENGINEERING WIRE LIST

WIRE	FROM	TO	TYPE	PART #	WIRE LEN	REFERENCE
47	J146 602196-901	J201-J 602200	20 AWG WHT	520999	40"	CH11 IN LO
48	J147 602196-901	J201-H 602200	20 AWG WHT	520999	40"	CH11 OUT HI
49	J148 602196-901	J201-L 602200	20 AWG WHT	520999	40"	CH11 OUT LO
50	J149 602196-901	J201-B 602200	20 AWG WHT	520999	40"	CH12 IN HI
51	J150 602196-901	J201-M 602200	20 AWG WHT	520999	40"	CH12 IN LO
52	J151 602196-901	J201-F 602200	20 AWG WHT	520999	40"	CH12 OUT HI
53	J152 602196-901	J201-N 602200	20 AWG WHT	520999	40"	CH12 OUT LO
54	J153 602196-901	J201-P 602200	20 AWG WHT	520999	40"	CH13 IN HI
55	J154 602196-901	J201-S 602200	20 AWG WHT	520999	40"	CH13 IN LO
56	J155 602196-901	J201-T 602200	20 AWG WHT	520999	40"	CH13 OUT HI
57	J156 602196-901	J201-Y 602200	20 AWG WHT	520999	40"	CH13 OUT LO
58	J157 602196-901	J201-U 602200	20 AWG WHT	520999	40"	CH14 IN HI
59	J158 602196-901	J201-X 602200	20 AWG WHT	520999	40"	CH14 IN LO
60	J159 602196-901	J201-e 602200	20 AWG WHT	520999	40"	CH14 OUT HI
61	J160 602196-901	J201-W 602200	20 AWG WHT	520999	40"	CH14 OUT LO
62	J161 602196-901	J201-V 602200	20 AWG WHT	520999	40"	CH15 IN HI
63	J162 602196-901	J201-R 602200	20 AWG WHT	520999	40"	CH15 IN LO
64	J163 602196-901	J201-a 602200	20 AWG WHT	520999	40"	CH15 OUT HI
65	J164 602196-901	J201-Z 602200	20 AWG WHT	520999	40"	CH15 OUT LO
66	J165 602196-901	J201-b 602200	20 AWG WHT	520999	40"	CH16 IN HI
67	J166 602196-901	J201-c 602200	20 AWG WHT	520999	40"	CH16 IN LO
68	J167 602196-901	J201-j 602200	20 AWG WHT	520999	40"	CH16 OUT HI
69	J168 602196-901	J201-d 602200	20 AWG WHT	520999	40"	CH16 OUT LO

ENGINEERING WIRE LIST

WIRE	FROM	TO	TYPE	PART #	WIRE LEN	REFERENCE
70	J169 602196-901	J201-m 602200	20 AWG WHT	520999	40"	CH17 IN HI
71	J170 602196-901	J201-n 602200	20 AWG WHT	520999	40"	CH17 IN LO
72	J171 602196-901	J201-v 602200	20 AWG WHT	520999	40"	CH17 OUT HI
73	J172 602196-901	J201-h 602200	20 AWG WHT	520999	40"	CH17 OUT LO
74	J173 602196-901	J201-p 602200	20 AWG WHT	520999	40"	CH18 IN HI
75	J174 602196-901	J201-f 602200	20 AWG WHT	520999	40"	CH18 IN LO
76	J175 602196-901	J201-r 602200	20 AWG WHT	520999	40"	CH18 OUT HI
77	J176 602196-901	J201-k 602200	20 AWG WHT	520999	40"	CH18 OUT LO
78	J177 602196-901	J201-x 602200	20 AWG WHT	520999	40"	CH19 IN HI
79	J178 602196-901	J201-t 602200	20 AWG WHT	520999	40"	CH19 IN LO
80	J179 602196-901	J201-s 602200	20 AWG WHT	520999	40"	CH19 OUT HI
81	J180 602196-901	J201-u 602200	20 AWG WHT	520999	40"	CH19 OUT LO
82	J181 602196-901	J201-w 602200	20 AWG WHT	520999	40"	CHASSIS GND

Racal Instruments

REPAIR AND CALIBRATION REQUEST FORM

To allow us to better understand your repair requests, we suggest you use the following outline when calling and include a copy with your instrument to be sent to the Racal Repair Facility.

Model_____Serial No._____Date_____

Company Name_____Purchase Order #_____

Billing Address_____

City

State/Province Zip/Postal Code Country

Shipping Address_____

City

State/Province Zip/Postal Code Country

Technical Contact_____Phone Number ( )_____
Purchasing Contact _____Phone Number ( )_____

1. Describe, in detail, the problem and symptoms you are having. Please include all set up details, such as input/output levels, frequencies, waveform details, etc.

_____
_____
_____
_____

2. If problem is occurring when unit is in remote, please list the program strings used and the controller type.

_____
_____
_____

3. Please give any additional information you feel would be beneficial in facilitating a faster repair time (i.e., modifications, etc.)

_____
_____
_____

4. Is calibration data required? Yes No (please circle one)

Call before shipping
Note: We do not accept "collect" shipments.

Ship instruments to nearest support office listed on back.

Support Offices

Racal Instruments, Inc.
4 Goodyear Street
Irvine, CA 92718-2002
Phone: 1-949-859-8999
1-800-RACAL-ATE
1-800-722-2528
FAX: 1-949-859-7309

Racal Instruments Ltd
480 Bath Road
Slough, Berkshire
SL1 6BE, United Kingdom
Phone: +44 (0) 1628 604455
FAX: +44 (0) 1628 662017

Racal Systems Electronique
18 Avenue Dutartre
78150 LeChesnay, France
Phone: +33 (1) 3923 2222
FAX: +33 (1) 3923 2223

Racal Systems Elettronica Srl
Strada 2-Palazzo C4
20090 Milanofiori Assago
Milan, Italy
Phone: +39 (02) 5750 1796
FAX: +39 (02) 5750 1828

Racal Elektronik System GmbH
Frankenforster Strasse 21
51427 Bergisch-Gladbach ,1Germany
Phone: +49 2204 92220
FAX: +49 2204 21491

Racal Australia Pty Ltd
3 Powells Road
Brookvale, NSW 2100, Australia
Phone: +61 (2) 9936 7000
FAX: +61 (2) 9936 7036

Racal Electronics Pte Ltd
26 Ayer Rajah Crescent, 04-06/07
Ayer Rajah Industrial Estate, Singapore 0513
Phone: +65 7792200
FAX: +65 7785400

Racal Instruments Ltd.
Room 1213 Nan Fung Centre
Tsuen Wan, New Territories
Hong Kong
Phone: +852-2405 5500
FAX: +852 2416 4335

REPAIR AND CALIBRATION REQUEST FORM

To allow us to better understand your repair requests, we suggest you use the following outline when calling and include a copy with your instrument to be sent to the Racal Repair Facility.

Model_____Serial No._____Date_____

Company Name_____Purchase Order #_____

Billing Address_____

City

State/Province Zip/Postal Code Country

Shipping Address_____

City

State/Province Zip/Postal Code Country

Technical Contact_____Phone Number ( )_____
Purchasing Contact _____Phone Number ( )_____

1. Describe, in detail, the problem and symptoms you are having. Please include all set up details, such as input/output levels, frequencies, waveform details, etc.

_____
_____
_____
_____

2. If problem is occurring when unit is in remote, please list the program strings used and the controller type.

_____
_____
_____

3. Please give any additional information you feel would be beneficial in facilitating a faster repair time (i.e., modifications, etc.)

_____
_____
_____

4. Is calibration data required? Yes No (please circle one)

Call before shipping
Note: We do not accept "collect" shipments.

Ship instruments to nearest support office listed on back.

Support Offices

Racal Instruments, Inc.
4 Goodyear Street
Irvine, CA 92718-2002
Phone: 1-949-859-8999
1-800-RACAL-ATE
1-800-722-2528
FAX: 1-949-859-7309

Racal Instruments Ltd
480 Bath Road
Slough, Berkshire
SL1 6BE, United Kingdom
Phone: +44 (0) 1628 604455
FAX: +44 (0) 1628 662017

Racal Systems Electronique
18 Avenue Dutartre
78150 LeChesnay, France
Phone: +33 (1) 3923 2222
FAX: +33 (1) 3923 2223

Racal Systems Elettronica Srl
Strada 2-Palazzo C4
20090 Milanofiori Assago
Milan, Italy
Phone: +39 (02) 5750 1796
FAX: +39 (02) 5750 1828

Racal Elektronik System GmbH
Frankenforster Strasse 21
51427 Bergisch-Gladbach ,1Germany
Phone: +49 2204 92220
FAX: +49 2204 21491

Racal Australia Pty Ltd
3 Powells Road
Brookvale, NSW 2100, Australia
Phone: +61 (2) 9936 7000
FAX: +61 (2) 9936 7036

Racal Electronics Pte Ltd
26 Ayer Rajah Crescent, 04-06/07
Ayer Rajah Industrial Estate, Singapore 0513
Phone: +65 7792200
FAX: +65 7785400

Racal Instruments Ltd.
Room 1213 Nan Fung Centre
Tsuen Wan, New Territories
Hong Kong
Phone: +852-2405 5500
FAX: +852 2416 4335

1260 VXI
SWITCHING CARD

1260-38
MULTIPLEXER/SCANNER

PUBLICATION NO. 980673-037

RACAL INSTRUMENTS

Racal Instruments, Inc.
4 Goodyear St., Irvine, CA 92718-2002
Tel: (800) RACAL-ATE, (949) 859- 8999, FAX: (949) 859-7309

Racal Instruments, Ltd.
480 Bath Road, Slough, Berkshire, SL1 6BE, United Kingdom
Tel: +44 (0) 1628 604455; FAX: +44 (0) 1628 662017

Racal Systems Electronique s.a.
18 Avenue Dutartre, 78150 LeChesnay, France
Tel: +33 (1) 3923 2222; FAX: +33 (1) 3923 2325

Racal Systems Elettronica Srl.
Strada 2-Palazzo C4, 20090 Milanofiori Assago, Milan, Italy
Tel: +39 (02) 5750 1796; FAX +39 (02) 5750 1828

Racal Elektronik System GmbH.
Frankenforster Strasse 21, 51427 Bergisch-Gladbach 1, Germany
Tel:+49 2204 92220; FAX: +49 2204 21491

Racal Australia Pty. Ltd.
3 Powells Road, Brookvale, NSW 2100, Australia
Tel: +61 (2) 9936 7000, FAX: +61 (2) 9936 7036

Racal Electronics Pte. Ltd.
26 Ayer Rajah Crescent, 04-06/07 Ayer Rajah Industrial Estate, Singapore 0513.
Tel: +65 7792200, FAX: +65 7785400

Racal Instruments, Ltd.
Room 1213 Nan Fung Centre, Tsuen Wan, New Territories, Hong Kong
Tel: +852 2405 5500, FAX: +852 2416 4335

http://www.racalinst.com

RACAL

PUBLICATION DATE:OCTOBER 1996

Copyright 1996 by Racal Instruments, Inc. Printed in the United States of America. All rights reserved.
This book or parts thereof may not be reproduced in any form without written permission of the publisher.

WARRANTY STATEMENT

Products sold by Racal Instruments, Inc. are warranted to be free from defects in workmanship or materials. Racal Instruments, Inc. will, at its option, either repair or replace any hardware products which prove to be defective during the warranty period. You are a valued customer. Our mission is to make any necessary repairs in a reliable and timely manner.

Duration of Warranty

The warranty period for this Racal Instruments, Inc. hardware is three years, except software and firmware products designed for use with Racal Instruments, Inc. Hardware are warranted not to fail to execute their programming instructions due to defect in materials or workmanship for a period of ninety (90) days from the date of delivery to the initial end user.

Return of Product

Authorization is required from Racal Instruments before you send us your product for service or calibration. Call your nearest Racal Instruments support facility. A list is located on the last page of this manual. If you are unsure where to call, contact Racal Instruments, Inc. Customer Support Department in Irvine, California, USA at 1-800-722-3262 or 1-949-859-8999 or via fax at 1-949-859-7309.

Limitation of Warranty

Racal Instruments, Inc. shall be released from all obligations under this warranty in the event repairs or modifications are made by persons other than authorized Racal Instruments service personnel or without the written consent of Racal Instruments.

Racal Instruments, Inc. expressly disclaims any liability to its customers, dealers and representatives and to users of its product, and to any other person or persons, for special or consequential damages of any kind and from any cause whatsoever arising out of or in any way connected with the manufacture, sale, handling, repair, maintenance, replacement or use of said products.

Representations and warranties made by any person including dealers and representatives of Racal Instruments, Inc., which are inconsistent or in conflict with the terms of this warranty (including but not limited to the limitations of the liability of Racal Instruments, Inc. as set forth above), shall not be binding upon Racal Instruments, Inc. unless reduced to writing and approved by an officer of Racal Instruments, Inc.

Except as stated above, Racal Instruments, Inc. makes no warranty, express or implied (either in fact or by operation of law), statutory or otherwise; and except to the extent stated above, Racal Instruments, Inc. shall have no liability under any warranty, express or implied (either in fact or by operation of law), statutory or otherwise.

PROPRIETARY NOTICE

This document and the technical data herein disclosed, are proprietary to Racal Instruments, and shall not, without express written permission of Racal Instruments, be used, in whole or in part to solicit quotations from a competitive source or used for manufacture by anyone other than Racal Instruments. The information herein has been developed at private expense, and may only be used for operation and maintenance reference purposes or for purposes of engineering evaluation and incorporation into technical specifications and other documents which specify procurement of products from Racal Instruments.

FOR YOUR SAFETY

Before undertaking any troubleshooting, maintenance or exploratory procedure, read carefully the **WARNING** and **CAUTION** notices.

This equipment contains voltage hazardous to human life and safety, and is capable of inflicting personal injury.

If this instrument is to be powered from the AC line (mains) through an autotransformer, ensure the common connector is connected to the neutral (earthed pole) of the power supply.

Before operating the unit, ensure the conductor (green wire) is connected to the ground (earth) conductor of the power outlet. Do not use a two-conductor extension cord or a three-prong/two-prong adaptor. This will defeat the protective feature of the third conductor in the power cord.

Maintenance and calibration procedures sometimes call for operation of the unit with power applied and protective covers removed. Read the procedures and heed warnings to avoid "live" circuit points.

Before operating this instrument:

1. Ensure the instrument is configured to operate on the voltage at the power source. See Installation Section.

2. Ensure the proper fuse is in place for the power source to operate.

3. Ensure all other devices connected to or in proximity to this instrument are properly grounded or connected to the protective third-wire earth ground.

If the instrument:

- fails to operate satisfactorily
- shows visible damage
- has been stored under unfavorable conditions
- has sustained stress

Do not operate until performance is checked by qualified personnel.

Racal Instruments

EC Declaration of Conformity

We

Racal Instruments Inc.
4 Goodyear Street
Irvine, CA 92718

declare under sole responsibility that the

1260-38 1x128 Two-Wire High-Density Scanner/Mux
P/N 407410

conforms to the following Product Specifications:

Safety: EN 61010-1

EMC: CISPR 11:1990/EN 55011 (1991): Group 1 Class A
IEC 801-2:1991/EN 50082-1 (1992): 4 kV CD, 8 kV AD
IEC 801-3:1984/EN 50082-1 (1992): 3 V/m, 27-500 MHz
IEC 801-4:1988/EN 50082-1 (1992): 1 kV

Supplementary Information:

The above specifications are met when the product is installed in a Racal Instruments certified mainframe with faceplates installed over all unused slots, as applicable.

The product herewith complies with the requirements of the Low Voltage Directive 73/23/EEC and the EMC Directive 89/336/EEC.

Irvine, CA, January 24, 1996

Quality Manager

NOTE FOR SYSTEMS WITH 1260-OPT 01T

The "Module-Specific Syntax" section of this manual shows the command syntax for the 1260-01S Smart Card. If you are using the newer 1260-01T Smart Card, the commands will NOT work as shown.

Consult the 1260-01T Manual for a description of the commands which may be used with the 1260-01T Smart Card.

The channel numbers described in this manual are valid for the 1260-01T. The channel numbers continue to be used for the 1260-01T.

The syntax of the commands which use channel numbers has changed for those cards controlled by the 1260-01T.

The new syntax used to close a channel is:

CLOSE (@ <module address> (<channel>))

For example, with for a relay module whose <module address> is set to 7, closing <channel> 0 is performed with the command:

CLOSE (@ 7 (0))

Using the older 1260-01S, the command would be (as shown in this manual):

CLOSE 7.0

Many other command syntax differences exist. Please consult chapter 2 of the 1260-01T manual for a description of the commands which are available for the 1260-01T.

Control Information for the 1260-38A and 1260-38B

The following information describes the control-register-to-relay-channel mapping for a 1260-38A or 1260-38B Relay Module. This information may be used to control the module when using a 1260-01T in the register-based mode of operation.

Each channel on this module is controlled by setting or clearing a single bit. Control Registers on the module operate 8 channels simultaneously. There are eight control bits per Control Register. Setting the bit to a 1 closes the relay; setting the bit to a 0 opens the relay.

The table below shows the mapping between logical channels used to operate the relay module in message-based mode and the bits within the Control Registers which may be used to operate the channel in register-based mode.

Each Control Register is located 2 addresses from the previous Control Register. This is shown in Table 2-2 of the 1260-01T manual. Control Register 0 is located at the "Base A24 Address" for the module. Consult the "Register-Based Operation" Section of Chapter 2 of the 1260-01T manual for a description of calculating control register addresses.

Note that when the 1260-01T message-based interface is used, ODD MUXes (channels 10 through 17, 30 through 37, channels 50 through 57, ..., 150 through 157) are operated in parallel with EVEN MUXes to operate as a 4-wire MUX. That is, when channel 0 is closed using the message-based interface with a 1260-38B, the firmware also closes channel 10; when channel 143 is opened, the firmware opens channel 153 as well.

Channel	Control Register	Control Bit
0	0	0
1	0	1
2	0	2
3	0	3
4	0	4
5	0	5
6	0	6
7	0	7
10*	1	0
11*	1	1
12*	1	2
13*	1	3
14*	1	4
15*	1	5
16*	1	6
17*	1	7
20	2	0
21	2	1
22	2	2
23	2	3
24	2	4
25	2	5
26	2	6
27	2	7
30*	3	0
31*	3	1
32*	3	2
33*	3	3
34*	3	4
35*	3	5
36*	3	6
37*	3	7
40	4	0
41	4	1
42	4	2

Channel	Control Register	Control Bit
43	4	3
44	4	4
45	4	5
46	4	6
47	4	7
50*	5	0
51*	5	1
52*	5	2
53*	5	3
54*	5	4
55*	5	5
56*	5	6
57*	5	7
60	6	0
61	6	1
62	6	2
63	6	3
64	6	4
65	6	5
66	6	6
67	6	7
70*	7	0
71*	7	1
72*	7	2
73*	7	3
74*	7	4
75*	7	5
76*	7	6
77*	7	7
80	8	0
81	8	1
82	8	2
83	8	3
84	8	4
85	8	5
86	8	6
87	8	7
90*	9	0
91*	9	1
92*	9	2
93*	9	3
94*	9	4
95*	9	5
96*	9	6
97*	9	7
100	10	0
101	10	1
102	10	2
103	10	3
104	10	4
105	10	5
106	10	6
107	10	7
110*	11	0
111*	11	1
112*	11	2
113*	11	3
114*	11	4
115*	11	5
116*	11	6
117*	11	7
120	12	0
121	12	1
122	12	2
123	12	3

Channel	Control Register	Control Bit
124	12	4
125	12	5
126	12	6
127	12	7
130*	13	0
131*	13	1
132*	13	2
133*	13	3
134*	13	4
135*	13	5
136*	13	6
137*	13	7
140	14	0
141	14	1
142	14	2
143	14	3
144	14	4
145	14	5
146	14	6
147	14	7
150*	15	0
151*	15	1
152*	15	2
153*	15	3
154*	15	4
155*	15	5
156*	15	6
157*	15	7
1000	16	1
1001**	16	2
1002**	16	0
2000	16	5
2001**	16	6
2002**	16	4
3000	17	1
3001**	17	2
3002**	17	0
4000	17	5
4001**	17	6
4002**	17	4
5000	18	1
5001**	18	2
5002**	18	0
6000	18	5
6001**	18	6
6002**	18	5
7000	19	1
7001**	19	2
7002**	19	0
8002**	19	4
9000	16	3
9001	16	7
9002	17	3
9003	17	7
9004	18	3
9005	18	7
9006	19	3
9007	19	5

* This channel is operated automatically by the firmware for the 1260-38B when controlled using the message-based interface. This channel is NOT programmable when using the message-based interface for the 1260-38B. This channel is set to the same state as the corresponding even MUX channel (e.g. when channel 127 is closed, channel 137 is closed automatically by the firmware; when channel 24 is opened, channel 34 is also opened by the firmware).

** This channel is not available when programming a 1260-38B in message-based mode.

This page was intentionally left blank

TABLE OF CONTENTS

1260-38 SCANNER/MULTIPLEXER MODULE

1.0	Introduction	1-1
1.1	1260-38 Module Specification	1-1
1.2	Ordering Information	1-3
1.3	Safety	1-4
1.4	Product Support	1-4
2.0	Installation Instructions	2-1
2.1	Unpacking and Inspection	2-1
2.2	Reshipment Instructions	2-1
2.3	Option 01 Installation	2-1
2.4	Module Installation	2-1
2.4.1	1260-38 ID Byte	2-2
3.0	Module Operation	3-1
3.1	Module Configuration	3-1
3.1.1	Two-Wire Operation	3-2
3.1.2	Four-Wire Operation	3-2
3.1.3	One-Wire Operation	3-2
3.1.4	100Ω Resistor Channels	3-3
3.1.5	Front Panel Connectors	3-3
3.1.6	Mating Connectors	3-3
3.2	1260-38 Module Specific Syntax	3-4
3.2.1	Syntax	3-4
3.2.2	OPEN Command	3-5
3.2.3	CLOSE Command	3-5
3.2.4	PSETUP Command	3-5
3.2.5	PDATAOUT Command	3-6
4.0	Drawings	4-1
5.0	Parts List	5-1
6.0	Optional Harness Assemblies	6-1

FIGURES

3-1 1260-38Module Configuration Block Diagram 3-8
3-2 1260-38 Multiplexer Configuration Block Diagram 3-9
3-3 1260-38 Pin Connections, Front View 3-10

TABLES

3-1 1260-38 Channel Number/Connector Pin/Cable Mapping 3-11

1.0 Introduction

The 1260-38 1 x 128 Two-Wire Scanner/Multiplexer Module consists of eight pairs of 1 x 8 multiplexers. These eight pairs of multiplexers, in conjunction with interconnecting relays, allow the 1260-38 module to be configured as:

- One 1 x 64 Four-wire multiplexer
- One 1 x 128 Two-wire multiplexer
- One 1 x 256 One-wire multiplexer

In addition, each pair of 1 x 8 multiplexers can be independently configured as:

- Two 1 x 8 Two-wire multiplexers
- One 1 x 16 Two-wire multiplexer
- One 1 x 32 One-wire multiplexer
- One 1 x 8 Four-wire multiplexer

Figure 3-1, 1260-38 Module Configuration Block Diagram, and Figure 3-2, 1260-38 Multiplexer Configuration Block Diagram, show a diagrammatic representation of the switch module and multiplexer pair, respectively.

1.1 1260-38 Module Specification

Maximum Switch Power	125VA, 60W
Maximum Switch Voltage	250VAC, 220VDC
Maximum Switch Current	2A AC, 2A DC
Bandwidth (50Ω)	
1 x 8 Configuration	> 30MHz
1 x 16 Configuration	> 30MHz
1 x 128 Configuration	> 2MHz
Insertion Loss (50Ω)	
1 x 8 Configuration	< 0.10dB to 100kHz < 0.25dB to 1MHz < 1.70dB to 10MHz
Insertion Loss (50Ω)	
1 x 128 Configuration	< 0.20dB to 100kHz < 1.00dB to 1MHz

Crosstalk (50Ω)	
1 x 8 Configuration	< -55dB to 100kHz < -50dB to 1 MHz < -22dB at 10MHz
Isolation (50Ω)	
1 x 8 Configuration	> 40dB to 100kHz > 35dB to 1 MHz > 20dB at 10 MHZ
Path Resistance	
1 x 8 Configuration	< 0.25Ω
1 x 128 Configuration	< 0.75Ω
Thermal EMF	
1 x 8 Configuration	< 15μV
1 x 128 Configuration	< 20μV
Impedance	
High-Low	> 2000MΩ
High-Chassis	> 2000MΩ
Low to Chassis	> 2000MΩ
Capacitance	
Channel to Chassis (1 x 8)	< 5pF
Channel to Chassis (1 x 128)	< 5pF
High to Low (1 x 8)	< 120pF
High to Low (1 x 128)	< 600pF
Temperature	
Operating	0°C to +55°C
Non-Operating	-40°C to +71°C
Relative Humidity	95 +/-5% RH Non-Condensing <30°C 75+/-5 %RH > 30°C 45+/-5 %RH > 40°C
Altitude	
Operating	10,000 ft
Non-Operating	15,000 ft
Vibration	0.013" double amplitude, 5-55Hz

Shock, functional	30g, 11 msec, ½ sine wave
Bench Handling	4 inch drop
Cooling Requirement	
Without Option 01 installed	
Airflow	2.0 liters/sec
Backpressure	0.05mm H_20
With Option 01 installed	
Airflow	3.0 liters/sec
Backpressure	0.2mm H_20
Power Requirement	
Without Option 01 installed	
+5V Static Current, I_{pm}	0.4A
+5V Dynamic Current, I_{dm}	0.075A
With Option 01 installed	
+5V Static Current, I_{pm}	2.5A
+5V Dynamic Current, I_{dm}	0.225A
+24V Static Current, I_{pm}	6mA per energized relay
+24V Dynamic Current, I_{dm}	0A
Weight	
Without Option 01 installed	3.2lb (1.45kg)
With Option 01 installed	3.5lb (1.60kg)
Minimum Option 01 Firmware Revision	28.1

1.2 Ordering Information

Listed below are part numbers for both the 1260-38 Switch Module and available mating connector accessories (see also Section 3.1.6).

Item	Description	Part #
1260-38 Switch Module	1260-38, 2w, 1 x 128 sc mux, 2 amp	407410
160-Pin Mating Connector	160-Pin Conn. Kit w/backshell and pins	407407
Cable Assy, 6ft, sleeved	160-Pin Cable Assy, 6ft, 24GA	407408
Cable Assy, 12ft, sleeved	160-Pin Cable Assy, 12ft, 24GA	407409

1.3 Safety

Refer to the "**FOR YOUR SAFETY**" page preceding the Table of Contents. Follow all **NOTES, CAUTIONS** and **WARNINGS** to ensure personal safety and prevent damage to the instrument.

1.4 Product Support

Racal Instruments has a complete Service and Parts Department. If you need technical assistance or should it be necessary to return your product for servicing, call 1-800-722-3262. If parts are required to repair the product at your facility, call 1-800-722-3262 and ask for the Parts Department.

When sending your instrument in for repair, complete the form in the back of this manual.

2.0 Installation Instructions

2.1 Unpacking and Inspection

1. Before unpacking the switching module, check the exterior of the shipping carton for any signs of damage. All irregularities should be noted on the shipping bill.

2. Remove the instrument from its carton, preserving the factory packaging as much as possible.

3. Inspect the switching module for any defect or damage. Immediately notify the carrier if any damage is apparent.

4. Have a qualified person check the instrument for safety before use.

2.2 Reshipment Instructions

1. Use the original packing material when returning the switching module to Racal Instruments for calibration or servicing. The original shipping carton and the instrument's plastic foam will provide the necessary support for safe reshipment.

2. If the original packing material is unavailable, wrap the switching module in an ESD Shielding bag and use plastic spray foam to surround and protect the instrument.

3. Reship in either the original or a new shipping carton.

2.3 Option 01 Installation

Installation of the Option 01 into the 1260-38 is described in the Installation section of the 1260 Series VXI Switching Cards Manual.

2.4 Module Installation

Installation of the 1260-38 Switching Module into a VXI mainframe, including the setting of switches SW1-1 through SW1-4, SW2 and SW3, is described in the Installation section of the 1260 Series VXI Switching Cards Manual. Configuration of switches SW1-5 and SW1-6 is described below.

2.4.1 1260-38 ID Byte

Refer to Section 2 of the Series 1260 VXI Switching Card Manual for an explanation of Module ID Byte.

The 1260-38 may be configured for two-wire or four wire switching. The two-wire configuration closes one relay for the selected channel. Four-wire configuration closes two relays for the selected channel. Each configuration responds to different sets of values for <channel number>. The set of values the 1260-38 responds to is controlled by switch SW1- 5. The switch settings that correspond to the two configurations are as follows:

Configuration	S1 Switch 5	S1 Switch 6
Two-wire	Off	Off
Four-wire	On	Off

The 1260-38 is set at the factory for two-wire configuration.

3.0 Module Operation

3.1 Module Configuration

The 1260-38 is a 1 x 128 Two-Wire Scanner/Multiplexer Module consisting of eight pairs of 1 x 8 multiplexers. These eight pairs of multiplexers, in conjunction with interconnecting relays, allow the 1260-38 module to be configured as:

- One 1 x 64 Four-wire multiplexer
- One 1 x 128 Two-wire multiplexer
- One 1 x 256 One-wire multiplexer

Each pair of 1 x 8 multiplexers can be independently configured as:

- Two 1 x 8 Two-wire multiplexers
- One 1 x 16 Two-wire multiplexer
- One 1 x 32 One-wire multiplexer
- One 1 x 8 Four-wire multiplexer

Reference should be made to Figure 3-1, 1260-38 Module Configuration Block Diagram, and Figure 3-2, 1260-38 Multiplexer Configuration Block Diagram.

The multiplexer pairs consist of two 1 x 8 multiplexers, giving a total of sixteen 1 x 8 multiplexers (00 through 15). Each 1 x 8 multiplexer consists of one two-wire common and eight two-wire channels. The channels are numbered 0000 to 0007 for multiplexer 00, through 0150 to 0157 for multiplexer 15.

The even-numbered multiplexers (00,02, ... 14) have a second two-wire common which has 100Ω series resistors in both the high and low paths. The even-numbered multiplexers also include a one-wire relay (channels 9000 though 9007) which select the high or low path of both two-wire common and 100Ω resistor two-wire common.

Interconnecting relays (channels 1002, 2002, ...8002) join the multiplexers to form multiplexer pairs. The multiplexer pairs are formed by multiplexers 00-01, 02-03, 04-05, 06-07, 08-09, 10-11, 12-13, and14-15.

The multiplexer pairs are joined to each other through two more pairs of interconnecting relays (1000, 1001, 2000, 2001, ...7000, 7001). This allows pairs of the module to be configured for four-wire operation.

3.1.1 Two-Wire Operation

Two-wire configuration gives the most flexibility as it allows all channels (0000 through 0157, 1000 through 8000, and 9000 through 9007) to be selected.

Interconnecting relays (1000, 1001, 2000, 2001, ... 7000, 7001) permit linking of all the 1 x 8 multiplexers to give configurations from sixteen 1 x 8 multiplexers up to one 1 x 128 multiplexer.

Example: Make a two-wire 1 x 32 using multiplexers 00,01,02,03

Close channels 1000, 1002 and 2002.

3.1.2 Four-Wire Operation

Four-wire configuration permits four-wire closures only. Only even-numbered multiplexers (00,02, ... 14) may be selected. Closing a channel in an even-numbered multiplexer also closes the equivalent channel in the adjacent odd-numbered multiplexer. For example, closing Channel 0002 (channel 2 of multiplexer 00) will also close channel 0012 (channel 2 of multiplexer 01).

The same applies to the interconnect relays (channels 1000, 1001, 2000, 2001, ... 7000, 7001). Closing channel 1000 will also close channel 1001). In four-wire operation, the interconnect relays permit configurations of eight 1 x 8 multiplexers up to one 1 x 64 multiplexer.

Example: Make a four-wire 1 x 24 using multiplexers 00, 01, 02, 03, 04, 05

Close channels 1000 and 2000.

3.1.3 One-Wire Operation

One-wire switching must be performed with the 1260-38 configured for two-wire operation. Each even-numbered multiplexer includes a one-wire relay (channels 9000, 9001, ... 9007). This allows configurations from sixteen 1 x 16 multiplexers up to one 1 x 256 multiplexer.

Example: Make a one-wire 1 x 96 using multiplexers 00,01,02,03,04,05

Close channels 1000, 1002, 2000, 2002 and 3002.

When the one-wire channel is open, the one-wire common is connected to the two-wire high path. When the one-wire channel is closed, the one-wire common is

connected to the two-wire low path. The same applies to the one-wire common with 100Ω series resistor.

3.1.4 100Ω Resistor Channels

Even-numbered multiplexers have two-wire commons that include 100Ω series resistors in both the high and low paths. This may be useful for applications where transient suppression is of concern. The resistors are rated at 1/8W. The one-wire relay is also connected to the two-wire resistor common to provide a one-wire resistor path.

3.1.5 Front Panel Connectors

The 1260-38 front panel connectors are labeled J200 and J201. The connector type is 5 x 32 (160-pin) DIN 41 612 male. The pin numbering is shown in Figure 3-3.

The mapping of channel numbers to connector pins and the available mating connector cable is given in Table 3-1.

3.1.6 Mating Connectors

There are no mating connectors shipped with the 1260-38 module. Racal Instruments offers the following accessories for mating connectors (see ordering information for part numbers):

- 160-Pin Connector Kit with backshell and pins
- 160-Pin Cable Assy, 6ft, 24GA
- 160-Pin Cable Assy, 12ft, 24GA

The 160-Pin Connector kit consists of a connector housing, customized backshell and **170** crimp pins. The backshell design has been optimized for system integration. The connector kit has been designed for 22 to 26 gauge cable. The crimp pin will lock or 'click' into the connector housing only when installed correctly. The assembler should ensure that the crimp pin is locked by tugging on the cable after insertion.

The hand crimp tool for loose crimp contacts is Erni Part Number 014 374. The disassembly tool is Erni Part Number 471 555.

The cable assemblies (optional lengths of 6ft. or 12ft.) use the 160-Pin Connector kit along with two 80-wire multi-colored 24 gauge cables. One end is unterminated. Refer to Table 3.1 for the mapping of channels to connector and cable.

3.2 1260-38 Module Specific Syntax

The Module Specific Syntax for the 1260-38 is required in the use of the OPEN and CLOSE commands. It will also appear in data output by the Master in response to the PDATAOUT and PSETUP commands.

3.2.1 Syntax

The Module Specific Syntax for the 1260-38 Multiplexer/Scanner module is as follows:

<COMMAND> <relay designator> [; <relay designator>] .....

where:

<relay designator> ::= <module address>.<channel range>[,<channel range>...]

<channel range> ::= <channel descriptor>[-<channel descriptor>]

<channel descriptor> ::= <interconnect><mux select><channel>

<module address> ::= 1..12

<interconnect> ::= 0 to 9

Where: 0 = multiplexer channels.
1 to 8 = multiplexer interconnect relays.
9 = one-wire high/low select.

<mux select> ::= 00 to 15

For two-wire mode: selects one of 16 1 x 8 multiplexers.

For four-wire mode: selects two of 16 1 x 8 multiplexers. Only even number multiplexers are allowed. Selecting multiplexer 00 will also select same channel on next multiplexer in sequence, in this case multiplexer 01.

<channel> ::= 0 to 7

0 to 7 for multiplexers
0 to 2 for interconnect relays
0 to 7 for one-wire relays

NOTE

The <module address> used here is not the VXIbus defined Logical Address of the 1260 Series Master. It is unique to the 1260 Series and describes the switching module in relation to the Master. This address corresponds to the binary value of the switch setting of SW1 on the switching module PCB. Refer to the Installation Section of the 1260 Series VXI Switching Cards Manual for more information.

3.2.2 CLOSE Command

The CLOSE command is used to close a channel.

Example:

CL[OSE] 1.0012

This CLOSE command will close channel 2 of multiplexer 01 on the module at switch card module address 1.

3.2.3 OPEN Command

The OPEN command is used to open a channel.

Example:

OP[EN] 3.0107

This OPEN command will open channel 7 of multiplexer 10 on the module at switch card module address 3.

Note that channels remain closed until opened by an OPEN command, RESET command, VXI hard or soft reset, or power-off.

3.2.4 PDATAOUT Command

The PDATAOUT command causes the specified module to transmit the CLOSED state of the relays within the switching module to the 1260 Controller. The syntax used is:

PD[ATAOUT] <module address>[;<module address>][;<module address>].....

The responses to the PDATAOUT command is as follows:

1260-38 Two-Wire

<module address> . 1260-38A 1x128 2-WIRE SCANNER/MULTIPLEXER
<module address> . <channel range>[,<channel range>][,<channel range>].....
<module address>.END

1260-38 Four-Wire

<module address> . 1260-38B 1x64 4-WIRE SCANNER/MULTIPLEXER
<module address> . <channel range>[,<channel range>][,<channel range>].....
<module address>.END

The response to the PDATAOUT command consists of a header on the first line as with the PSETUP response. The next line details the channels currently closed on the module and is blank when no channels are closed. Again, the last line is denoted by the "END" string of characters.

3.2.5 PSETUP Command

The PSETUP command causes the specified module setup to be transmitted to the VXI Controller. The syntax used is:

PS[ETUP] <module address>[;<module address>][;<module address>].....

where:

<module address> is the switch card address.

The responses to the PSETUP command for the 1260-38 Multiplexer/Scanner is as follows:

1260-38 Two-Wire

<module address> . 1260-38A 1x128 2-WIRE SCANNER/MULTIPLEXER
<module address> . BBM
<module address>.END

1260-38 Four-Wire

<module address> . 1260-38B 1x64 4-WIRE SCANNER/MULTIPLEXER
<module address> . BBM
<module address>.END

The response to the PSETUP command consists of a header on the first line. The header describes the model number following an A or B designating two or four-wire, respectively. The next line designates the setup mode for scanning which, by default, is Break-Before-Make (BBM). The last line containing the "END" characters denotes no more information to report.

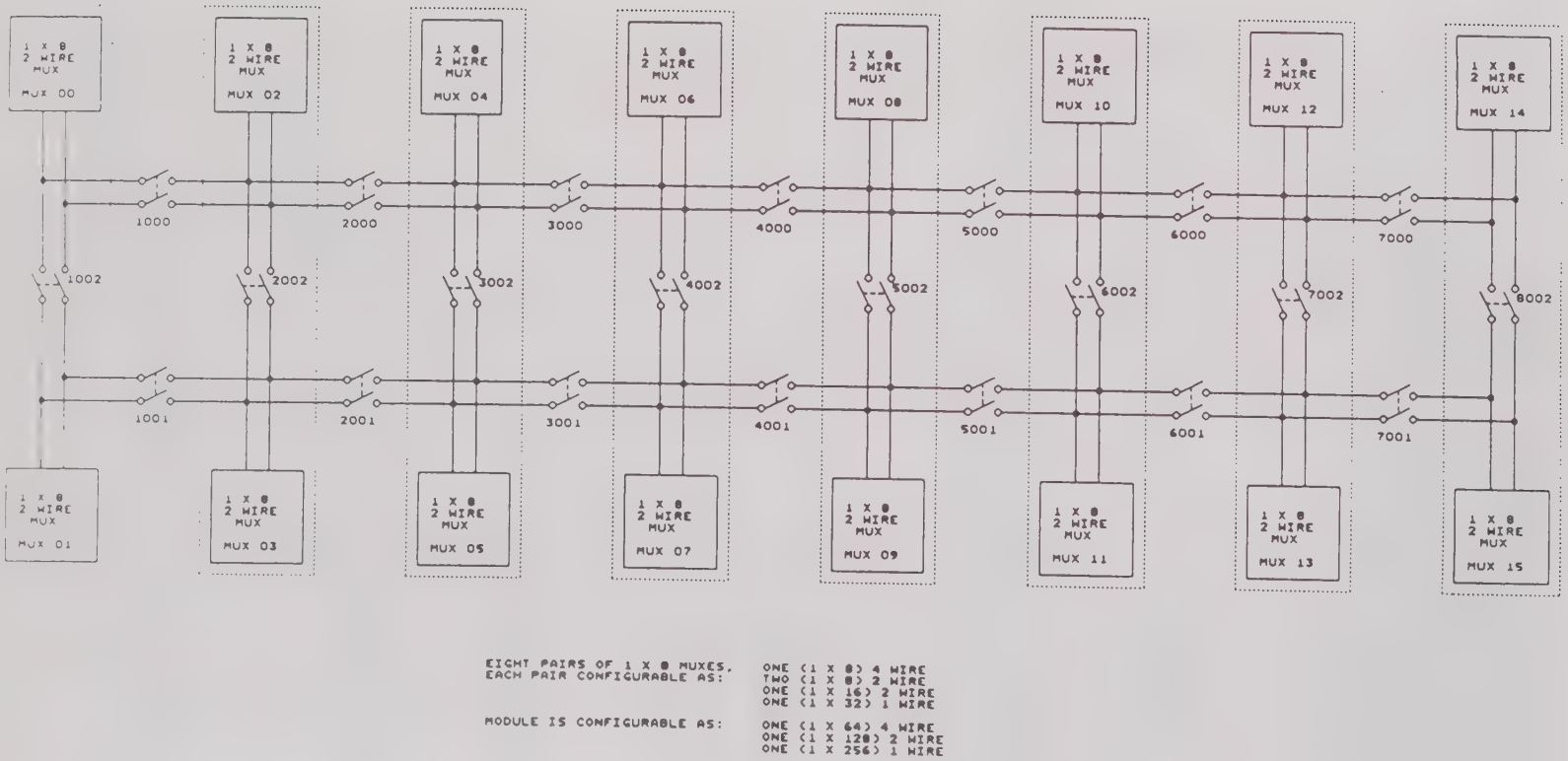

Figure 3-1, 1260-38 Module Configuration Block Diagram

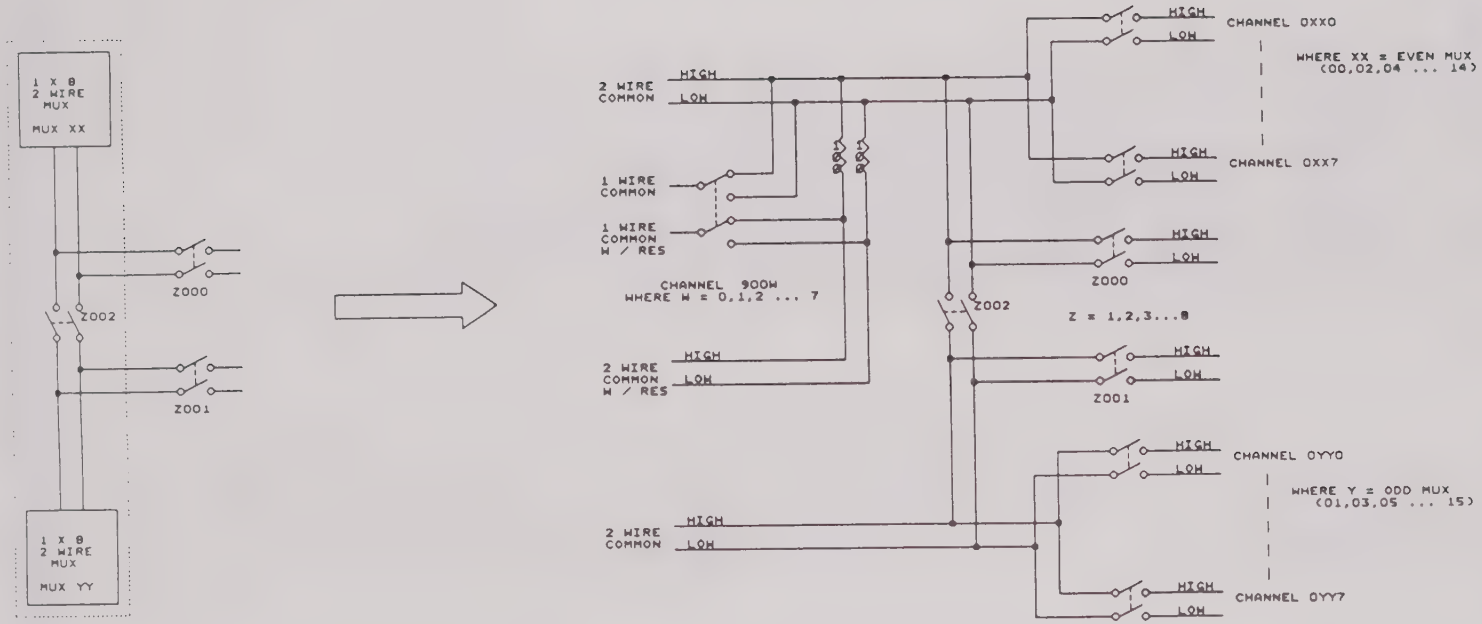

Figure 3-2, 1260-38 Multiplexer Configuration Block Diagram

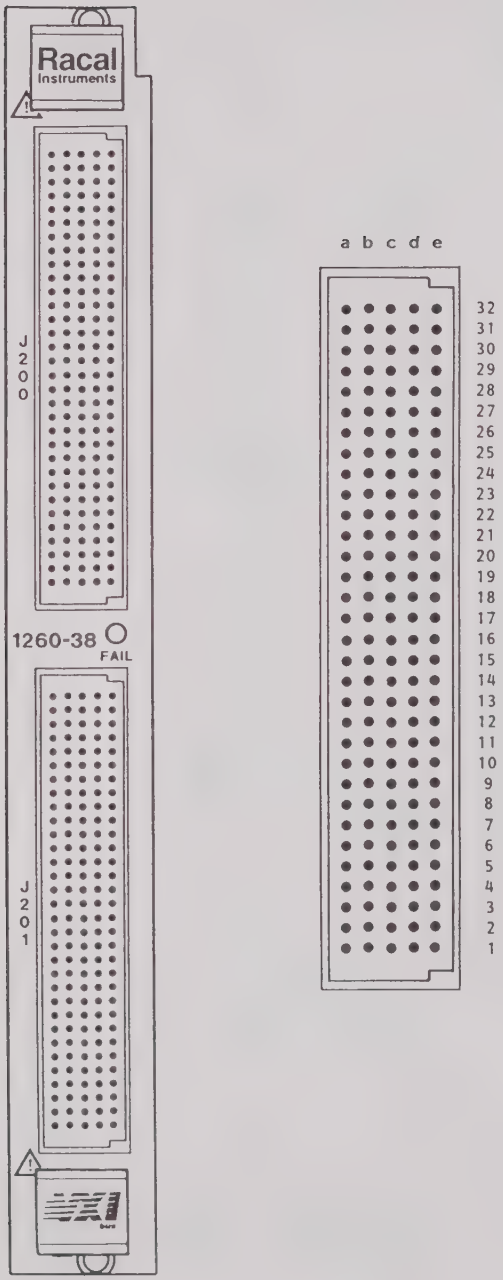

Figure 3-3, 1260-38 Pin Connections, Front View

Interconnecting Channels

Channel #	Path
1000	COM 00 TO COM 02
1001	COM 01 TO COM 03
1002	COM 00 TO COM 01
2000	COM 02 TO COM 04
2001	COM 03 TO COM 05
2002	COM 02 TO COM 03
3000	COM 04 TO COM 06
3001	COM 05 TO COM 07
3002	COM 04 TO COM 05
4000	COM 06 TO COM 08
4001	COM 07 TO COM 09
4002	COM 06 TO COM 07
5000	COM 08 TO COM 10
5001	COM 09 TO COM 11
5002	COM 08 TO COM 09
6000	COM 10 TO COM 12
6001	COM 11 TO COM 13
6002	COM 10 TO COM 11
7000	COM 12 TO COM 14
7001	COM 13 TO COM 15
7002	COM 12 TO COM 13
8000	COM 14 TO COM 15

Table 3-1, 1260-38 Channel Number/Connector Pin/Cable Mapping Continued

One-Wire Channels

9000	COM001W	- open connects to COM00 Hi
		- close connects to COM00 Lo
	COM001WR	- open connects to COM00R Hi
		- close connects to COM00R Lo
9001	COM021W	- open connects to COM02 Hi
		- close connects to COM02 Lo
	COM021WR	- open connects to COM02R Hi
		- close connects to COM02R Lo
9002	COM041W	- open connects to COM04 Hi
		- close connects to COM04 Lo
	COM041WR	- open connects to COM04R Hi
		- close connects to COM04R Lo
9003	COM061W	- open connects to COM06 Hi
		- close connects to COM06 Lo
	COM061WR	- open connects to COM06R Hi
		- close connects to COM06R Lo
9004	COM081W	- open connects to COM08 Hi
		- close connects to COM08 Lo
	COM081WR	- open connects to COM08R Hi
		- close connects to COM08R Lo
9005	COM101W	- open connects to COM10 Hi
		- close connects to COM10 Lo
	COM101WR	- open connects to COM10R Hi
		- close connects to COM10R Lo
9006	COM121W	- open connects to COM12 Hi
		- close connects to COM12 Lo
	COM121WR	- open connects to COM12R Hi
		- close connects to COM12R Lo
9007	COM141W	- open connects to COM14 Hi
		- close connects to COM14 Lo
	COM141WR	- open connects to COM14R Hi
		- close connects to COM14R Lo

Table 3-1, 1260-38 Channel Number/Connector Pin/Cable Mapping Continued

4.0 Drawings

407410	Final Assy, 1260-38	4-2
405100	PCB Assy, 1260-38	4-4
435100	Schematic, 1260-38	4-6

Front Panel Connector Accessories

407407	160-Pin Connector Kit with backshell and pins	4-29
407408	160-Pin Cable Assy, 6ft, 24GA	4-30
407409	160-Pin Cable Assy, 12ft, 24GA	4-30

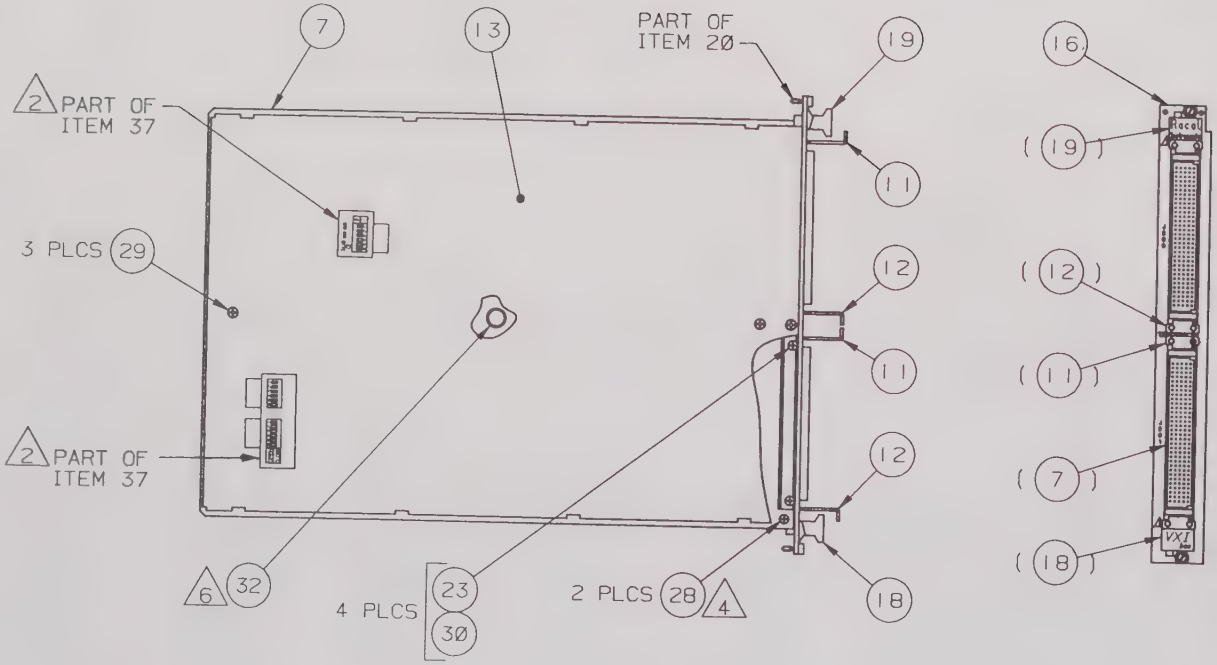

NOTES:

1. DISCARD UNUSED HARDWARE PART OF ITEM 20.
2. AFFIX LABELS PART OF ITEM 37 AS SHOWN. ALIGN LABEL TEXT WITH APPROPRIATE SWITCH ACTUATORS.
3. NOTE NOT USED.
4. APPLY LOCTITE (ITEM 33) SPARINGLY TO ALL SCREWS THAT DO NOT USE MECHANICAL LOCKING HARDWARE. DO NOT ALLOW CONTACT WITH EJECTOR HANDLES (ITEM 19 TOP), AND (ITEM 18 BOTTOM).
5. LOCATE APPROPRIATE VXI LABEL WHERE SHOWN. REFERENCE 921410 FOR SPECIFIC LABEL INFORMATION.
6. ATTACH BUMPER (ITEM 32) TO CIRCUIT SIDE OF PCB ASSEMBLY (ITEM 7) APPROXIMATELY WHERE SHOWN.

RACAL Instruments, Inc.			
4 Goodyear St., Irvine, CA. 92718-2002			
TITLE: FINAL ASSEMBLY, 1260-38			
SIZE: D	CAGE CODE: 21793	DWG NO.: 407410	REV.: B
SCALE: 1/2	CALC. WT	ACT. WT	SHEET 1 OF 2

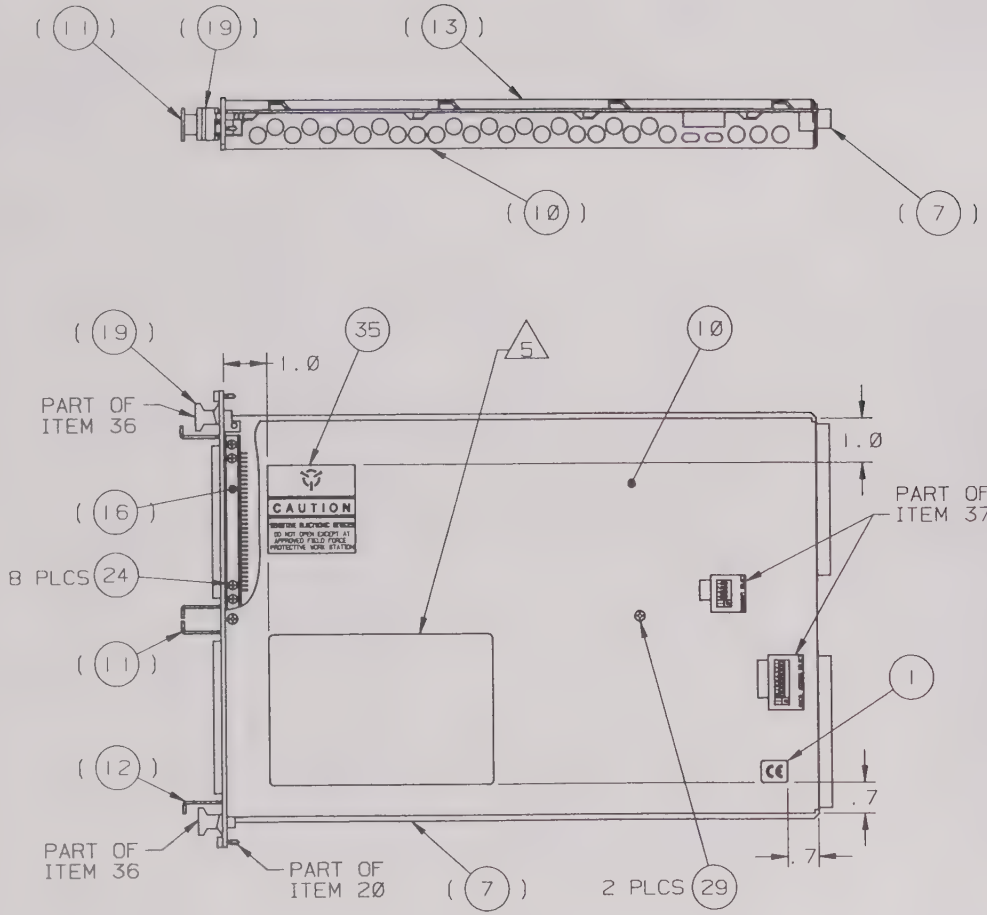

SIZE	CAGE CODE	DWG NO.	REV.
D	21793	40741Ø	B
SCALE 1/2		CALC. WT / ACT. WT	SHEET 2 OF 2

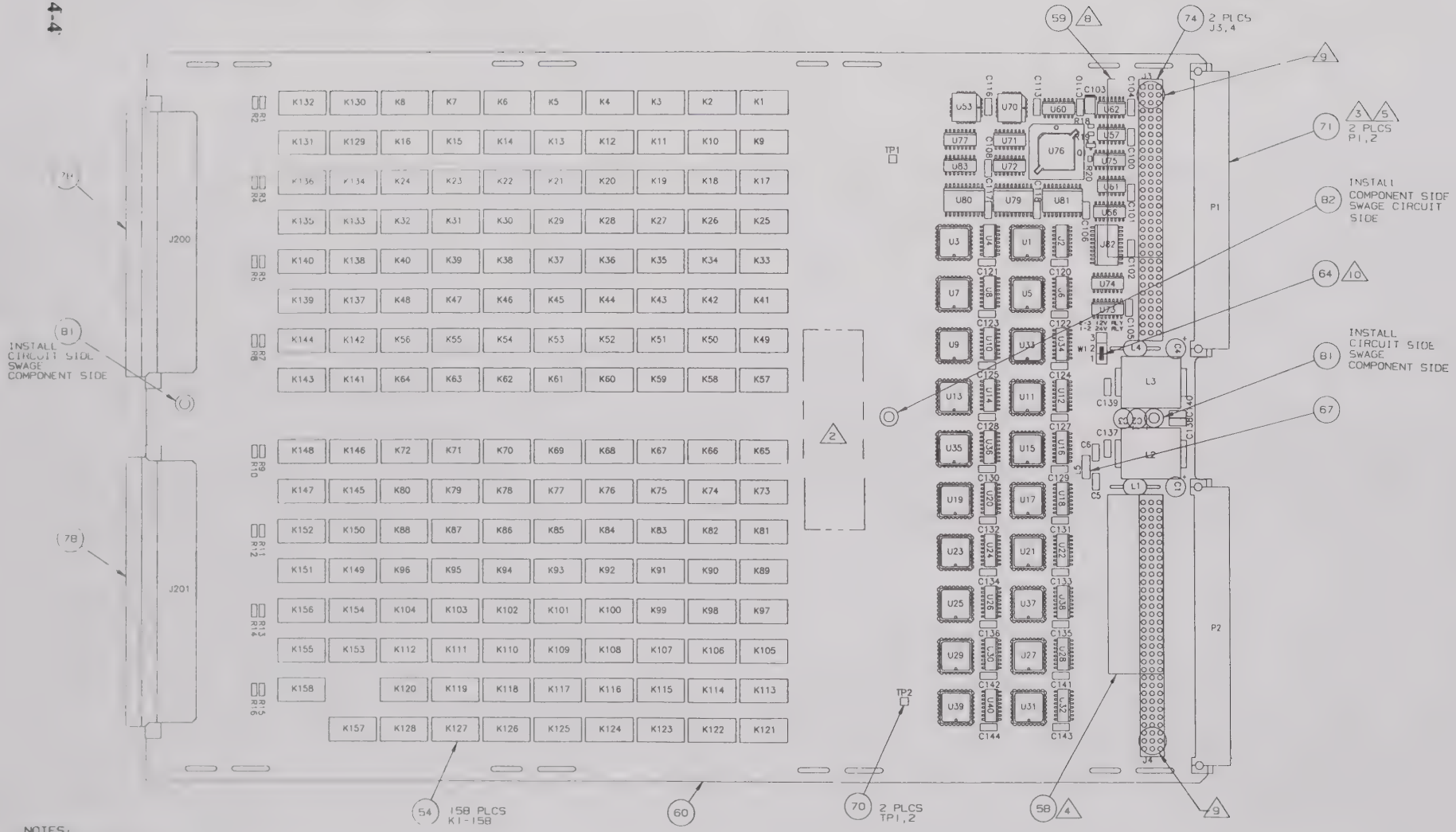

COMPONENT SIDE

NOTES:

1. REFERENCE SCHEMATIC 435100.
2. INK STAMP SERIAL NUMBER & CURRENT REVISION ON COMPONENT SIDE APPROX WHERE SHOWN
3. SOLDER TAILS ON CIRCUIT SIDE OF PCB FOR P1 & P2 (ITEM 71) TO BE TRIMMED TO A MAXIMUM HEIGHT OF .045.
4. INSTALL (ITEM 58) PCB INTO (ITEM 74) J4
5. P1 AND P2 MUST BE INSTALLED FLUSH AT RIGHT ANGLE TO PCB
6. SET SW1 (ITEM 75) TO LOGICAL ADDRESS 1 PER TABLE 1 DO NOT WAVE SOLDER
7. SET SW2 AND SW3 (ITEM 75) TO ON POSITION DO NOT WAVE SOLDER
8. INSTALL (ITEM 59) PCB INTO (ITEM 74) J3.
9. SOLDER TAILS ON CIRCUIT SIDE OF PCB FOR J3 & J4 (ITEM 74) 3 ROWS (9 PINS) NEAREST EDGE OF PC BOARD TO BE TRIMMED TO A MAXIMUM HEIGHT OF .045
10. INSTALL JUMPER W1 PIN 1 TO W1 PIN 2 USING ITEM 64

PROPRIETARY NOTICE

THIS DOCUMENT AND THE TECHNICAL DATA HEREIN DISCLOSED ARE PROPRIETARY TO RACAL INSTRUMENTS INC. AND SHALL NOT, WITHOUT THE EXPRESS WRITTEN PERMISSION OF RACAL INSTRUMENTS INC BE USED RELEASED OR DISCLOSED IN WHOLE OR IN PART OR USED TO SOLICIT QUOTATIONS FROM A COMPETITIVE SOURCE OR USED FOR MANUFACTURE BY ANYONE OTHER THAN RACAL INSTRUMENTS INC. THE INFORMATION HEREON HAS BEEN DEVELOPED AT PRIVATE EXPENSE AND MAY ONLY BE USED FOR PURPOSES OF ENGINEERING EVALUATION AND FOR INCORPORATION INTO TECHNICAL SPECIFICATIONS AND OTHER DOCUMENTS WHICH SPECIFY PROCUREMENT OF PRODUCTS FROM RACAL INSTRUMENTS INC

RACAL Instruments, Inc.
4 Goodyear St., Irvine, CA. 92718-2002

TITLE: PCB ASSY, 1260-38

SIZE	CAGE CODE	DWG NO.	REV.
D	21793	405100	A

SCALE | CALC WT | ACT WT | SHEET 1 OF 5

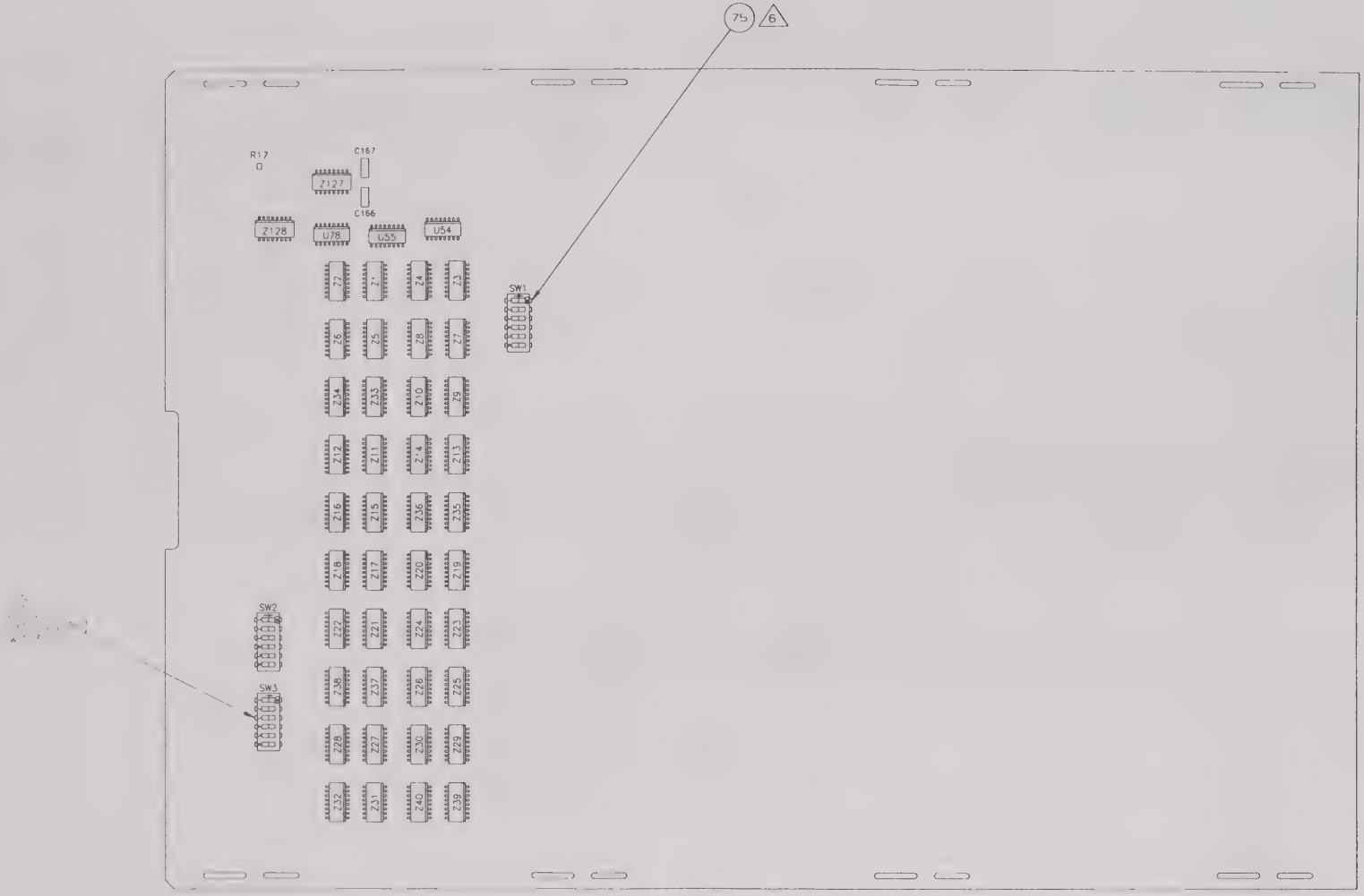

CIRCUIT SIDE

SIZE	CAGE CODE	DWG NO.	REV.
D	21793	405100	A
SCALE		CALC WT / ACT WT	SHEET 2 OF 5

Z128
W1
U83
TP2
SW3
R20
Q1
P2
L5
K158
J201
C167
HIGHEST REF.DES.

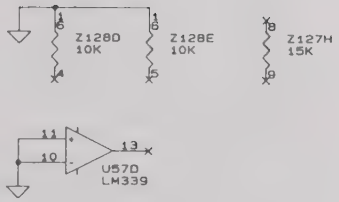

UNUSED GATES

REF. DES.	IC TYPE	+5V PIN NO.	VRR PIN NO.	GND PIN NO.
IC POWER CONNECTIONS				
U82	74HC299	20		10
U79, 80, 81	74HC240	20		10
U76	231154 (22V10H)	28		14
U75	26LS31	16		8
U73, 74	26LS32	16		8
U71, 72, 77, 83	74HCT253	16		8
U70	231152-002 (16L8Q)	20		10
U61, 62	74HCT164	14		7
U57	LM339	3		12
U56	74HCT85	16		8
U54, 55, 78	74HCT138	16		8
U53	231153-001 (16R4)	20		10
U2, 4, 6, 8, 10, 12, 14, 16, 18, 20, 22, 24, 26, 28, 30, 32, 34, 36, 38, 40, 60	74HCT166	16		8
U1, 3, 5, 7, 9, 11, 13, 15, 17, 19, 21, 23, 25, 27, 29, 31, 33, 35, 37, 39	5801BV	27	15	16, 17

NOTES:

1. CAPACITOR VALUES ARE IN MICROFARADS, 50V, +/-20% UNLESS OTHERWISE SPECIFIED.
2. RESISTOR VALUES ARE IN OHMS, 1/8W, +/-5% UNLESS OTHERWISE SPECIFIED.
3. RESISTOR NETWORK VALUES ARE IN OHMS, +/-2%.
4. PARTS INDICATED ARE NOT INSTALLED.
5. RELAYS K1-K158 ARE RACAL INSTRUMENTS P/N 310256.

PROPRIETARY NOTICE

THIS DOCUMENT AND THE TECHNICAL DATA HEREIN DISCLOSED ARE PROPRIETARY TO RACAL INSTRUMENTS INC. AND SHALL NOT, WITHOUT THE EXPRESS WRITTEN PERMISSION OF RACAL INSTRUMENTS INC. BE USED, RELEASED OR DISCLOSED IN WHOLE OR IN PART, OR USED TO SOLICIT QUOTATIONS FROM A COMPETITIVE SOURCE OR USED FOR MANUFACTURE BY ANYONE OTHER THAN RACAL INSTRUMENTS INC. THE INFORMATION HEREON HAS BEEN DEVELOPED AT PRIVATE EXPENSE, AND MAY ONLY BE USED FOR PURPOSES OF ENGINEERING EVALUATION AND FOR INCORPORATION INTO TECHNICAL SPECIFICATIONS AND OTHER DOCUMENTS WHICH SPECIFY PROCUREMENT OF PRODUCTS FROM RACAL INSTRUMENTS INC.

RACAL Instruments, Inc.
4 Goodyear St., Irvine, CA. 92718-2002

TITLE
SCHEM., 1260-38

SIZE	CAGE CODE	DWG NO.	REV.
B	21793	435100	B

SCALE ----- CALC.WT ACT.WT SHEET 1 OF 23

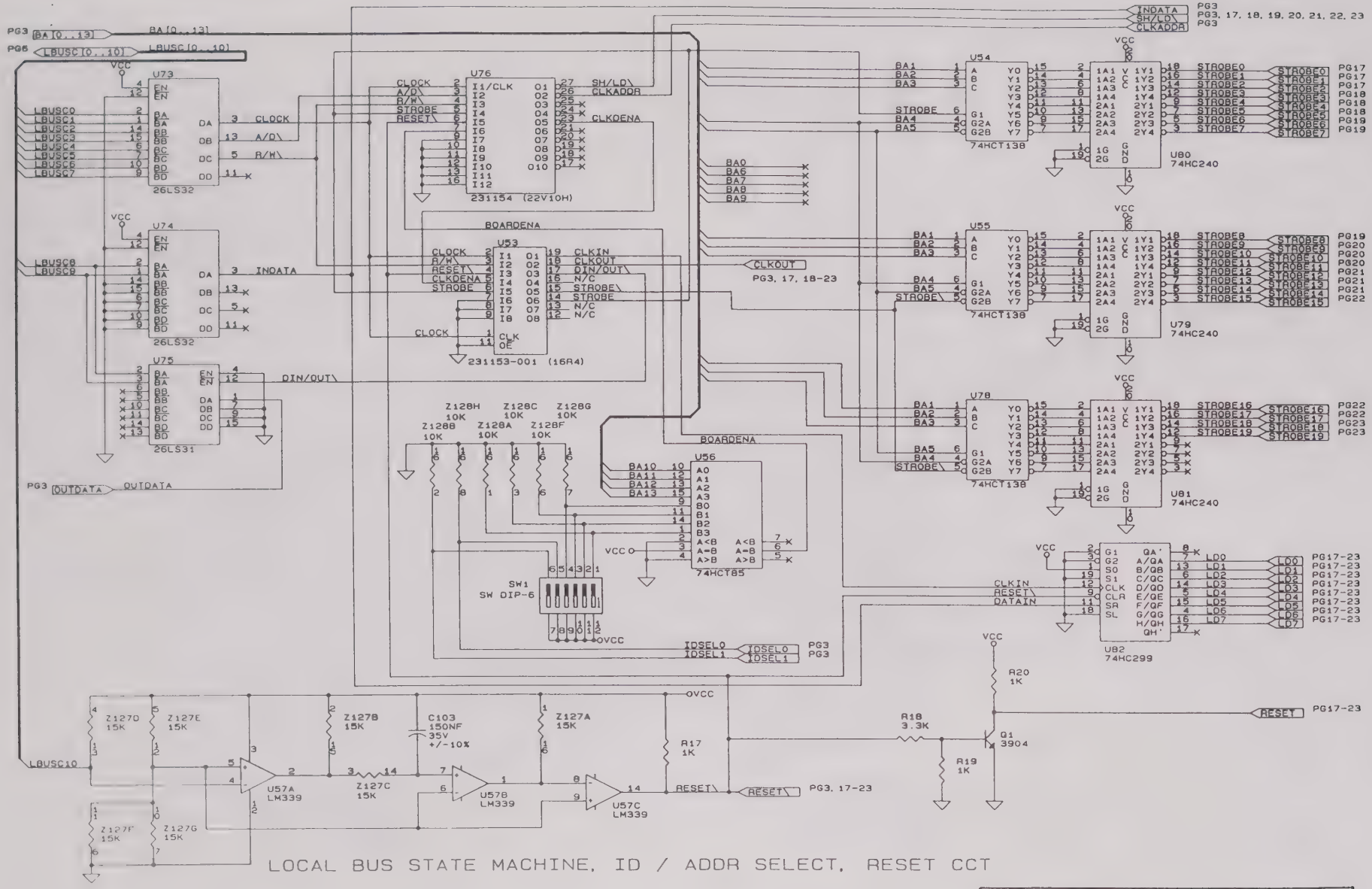
LOCAL BUS STATE MACHINE, ID / ADDR SELECT, RESET CCT
SIZE B
CAGE CODE 21793
DWG NO. 435100
REV. B
SCALE
CALC.VT
ACT.VT
SHEET 2

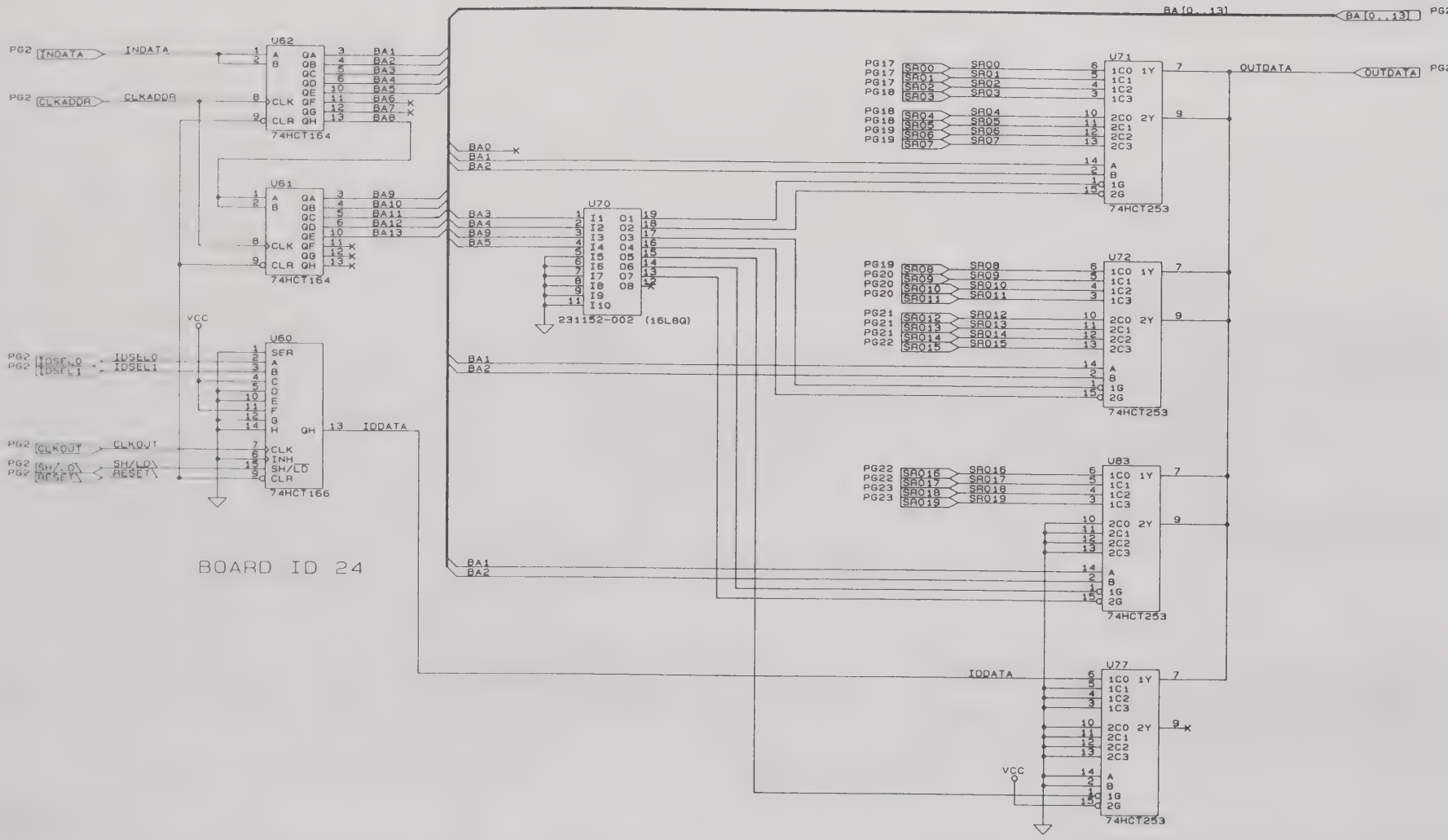

BOARD ID AND CONFIDENCE READBACK

SIZE	CAGE CODE	DWG NO.	REV.
B	21793	435100	B
SCALE -----		CALC.WT / ACT.WT	SHEET 3

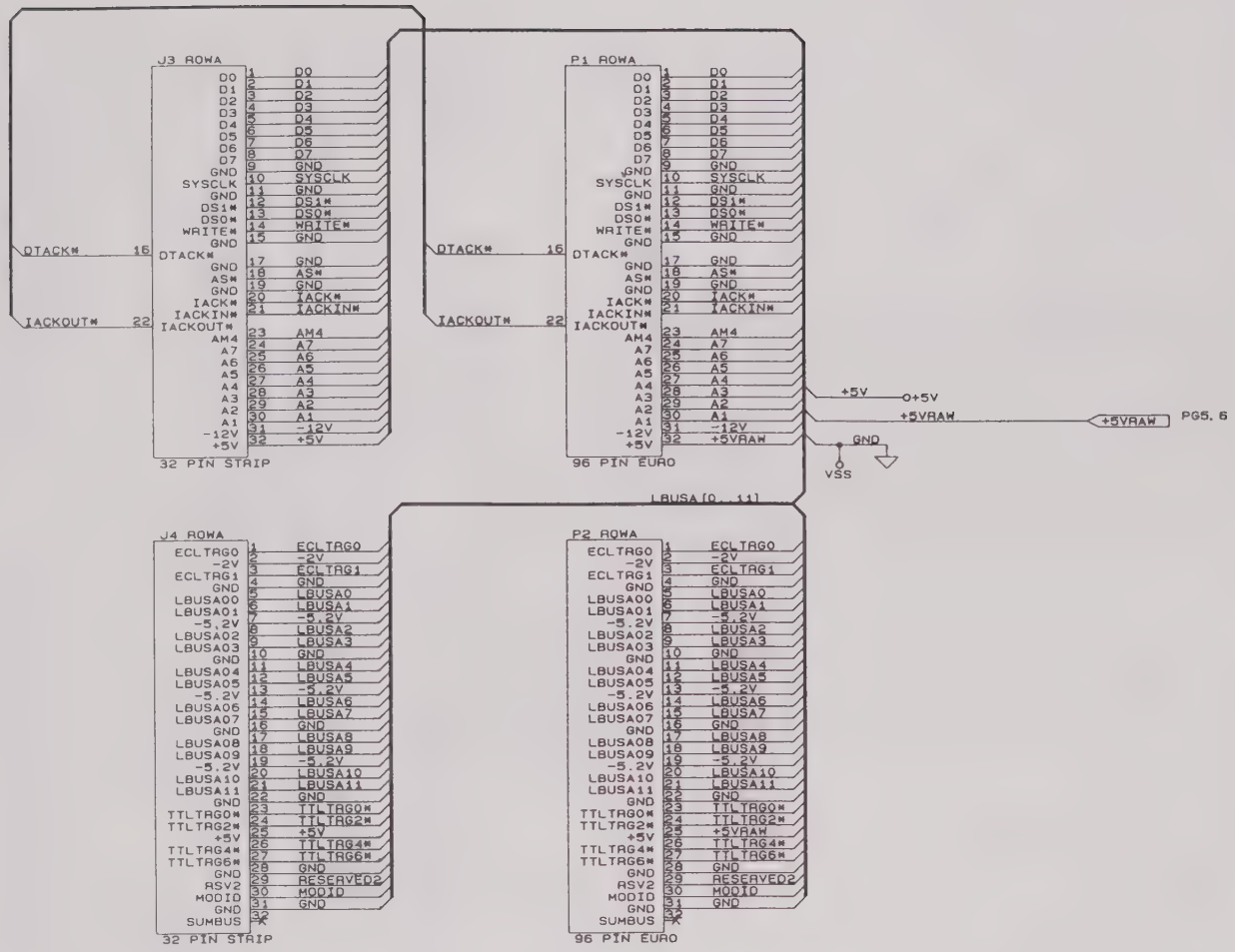

VXI / OPTION 01 CONNECTORS

SIZE	CAGE CODE	DWG NO.	REV.
B	21793	435100	B
SCALE -----		CALC.VT / ACT.VT	SHEET 4

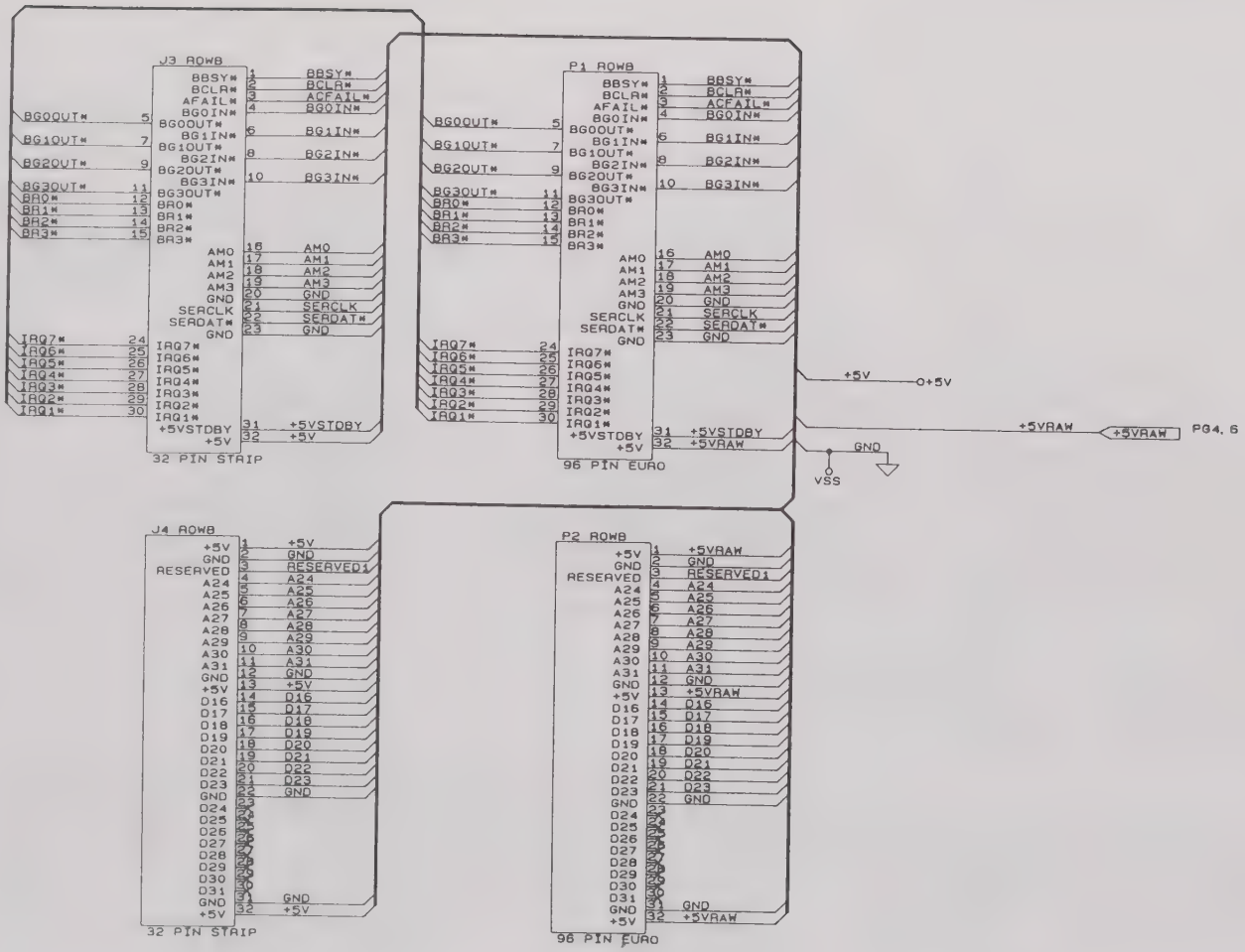

VXI / OPTION 01 CONNECTORS

SIZE	CAGE CODE	DWG NO.	REV.
B	21793	435100	B
SCALE -----		CALC.WT / ACT.WT	SHEET 5

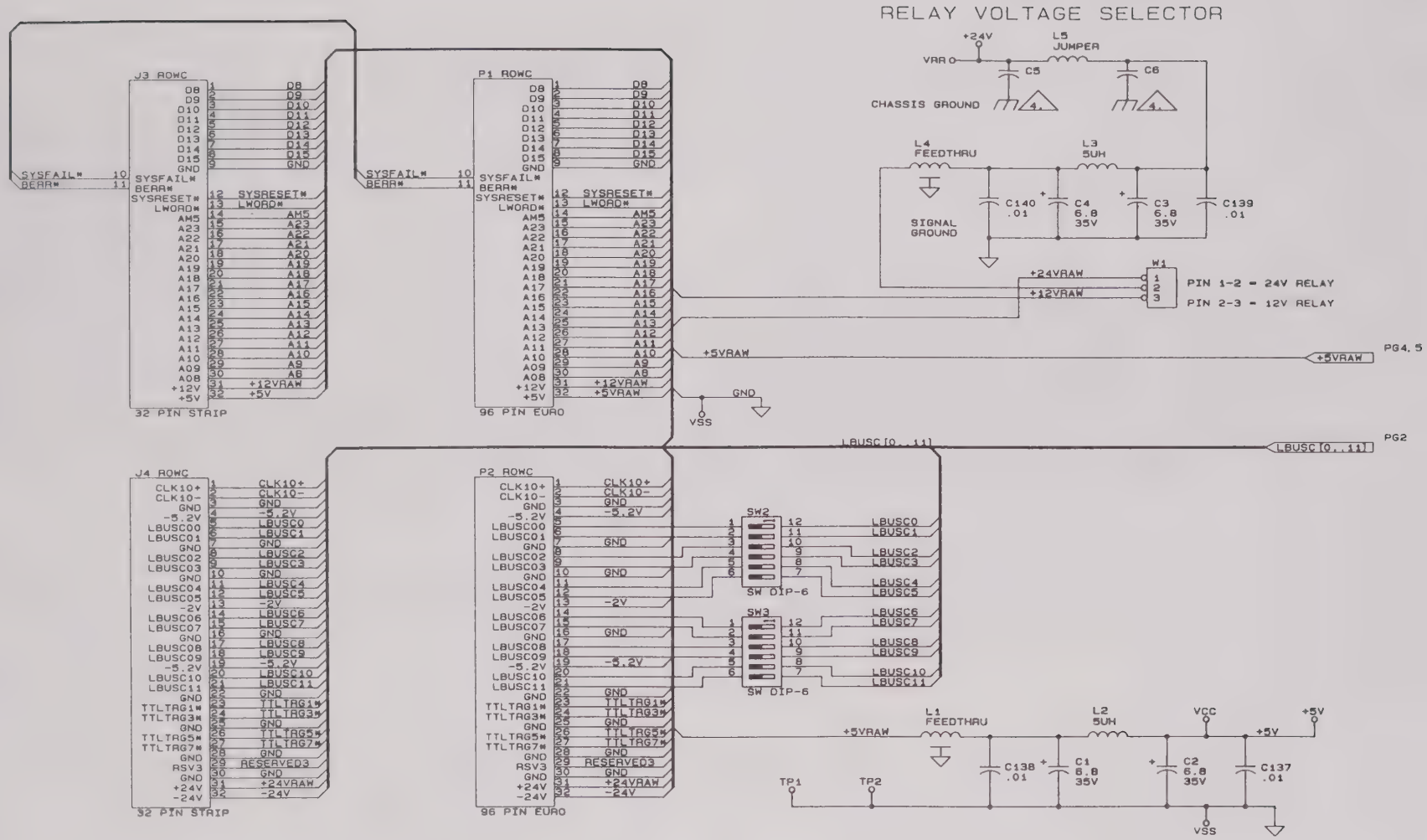

VXI / OPTION 01 CONNECTORS

SIZE	CAGE CODE	DWG NO.	REV.
B	21793	435100	B
SCALE -----		CALC.VT ACT.VT	SHEET 6

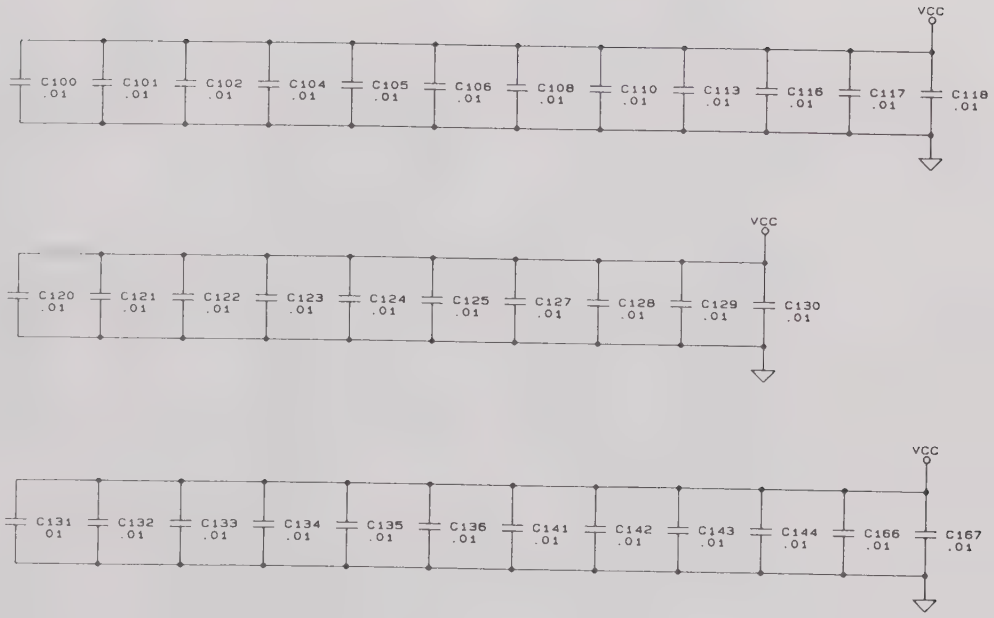

DECOUPLING CAPACITORS

SIZE	CAGE CODE	DWG NO.	REV.
B	21793	435100	B
SCALE -----		CALC.VT ACT.VT	SHEET 7

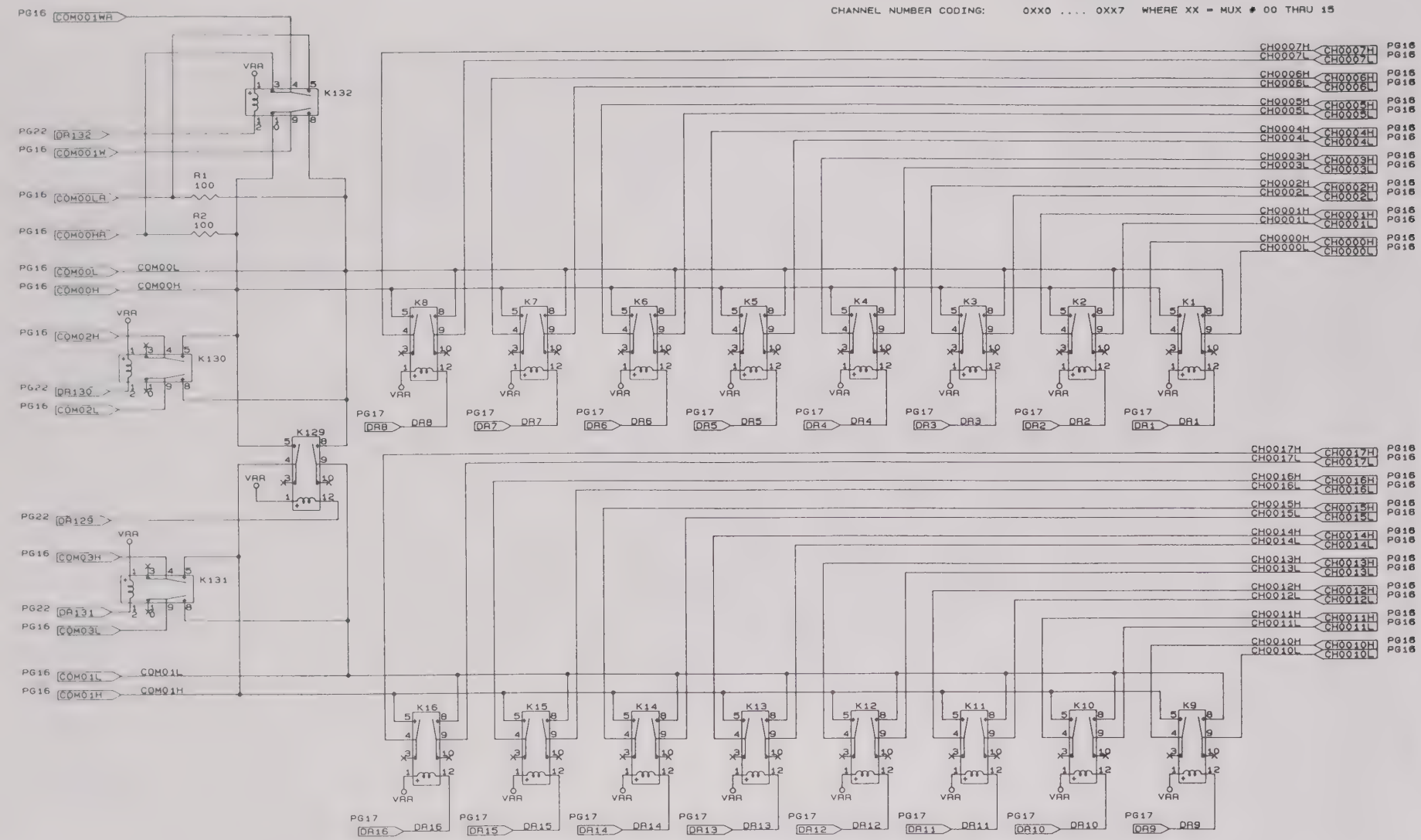

MULTIPLEXERS 00, 01

SIZE	CAGE CODE	DWG NO.	REV.
B	21793	435100	B
SCALE -----		CALC.VT / ACT.VT	SHEET 8

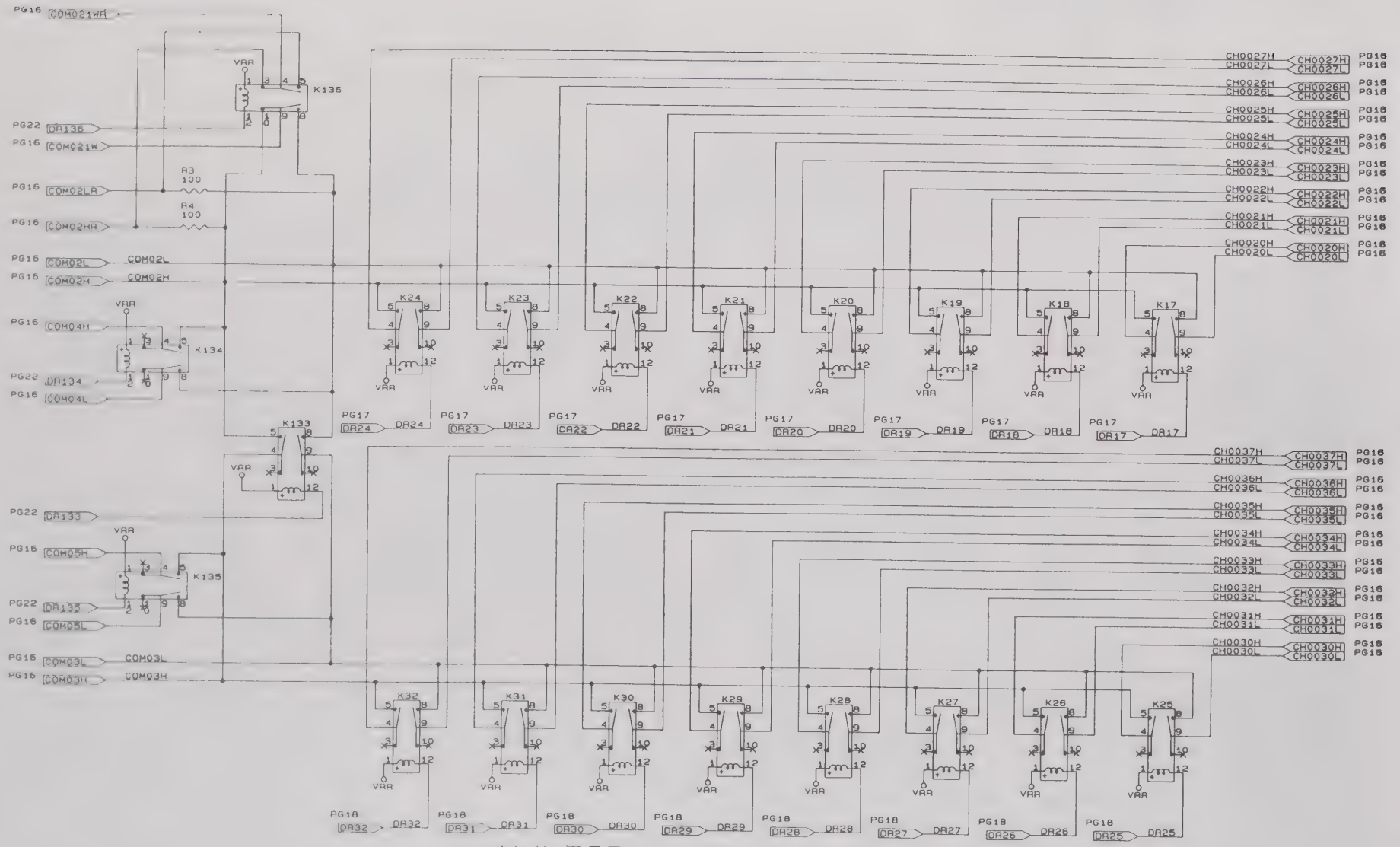

MULTIPLEXERS 02, 03

SIZE	CAGE CODE	DWG NO.	REV.
B	21793	435100	B
SCALE -----		CALC. VT / ACT. VT	SHEET 9

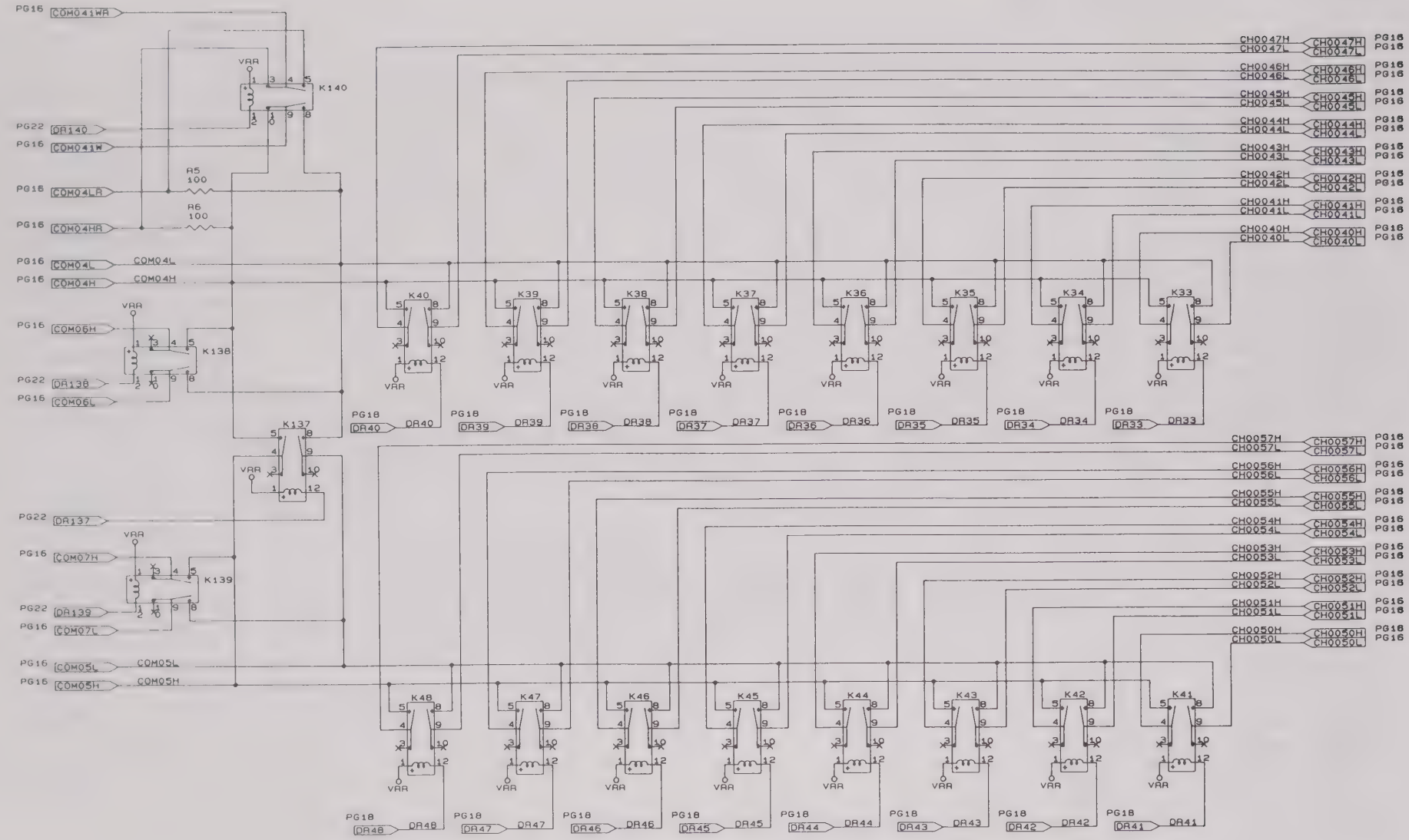

MULTIPLEXERS 04, 05

SIZE	CAGE CODE	DWG NO.	REV.
B	21793	435100	B
SCALE -----		CALC.VT / ACT.VT	SHEET 10

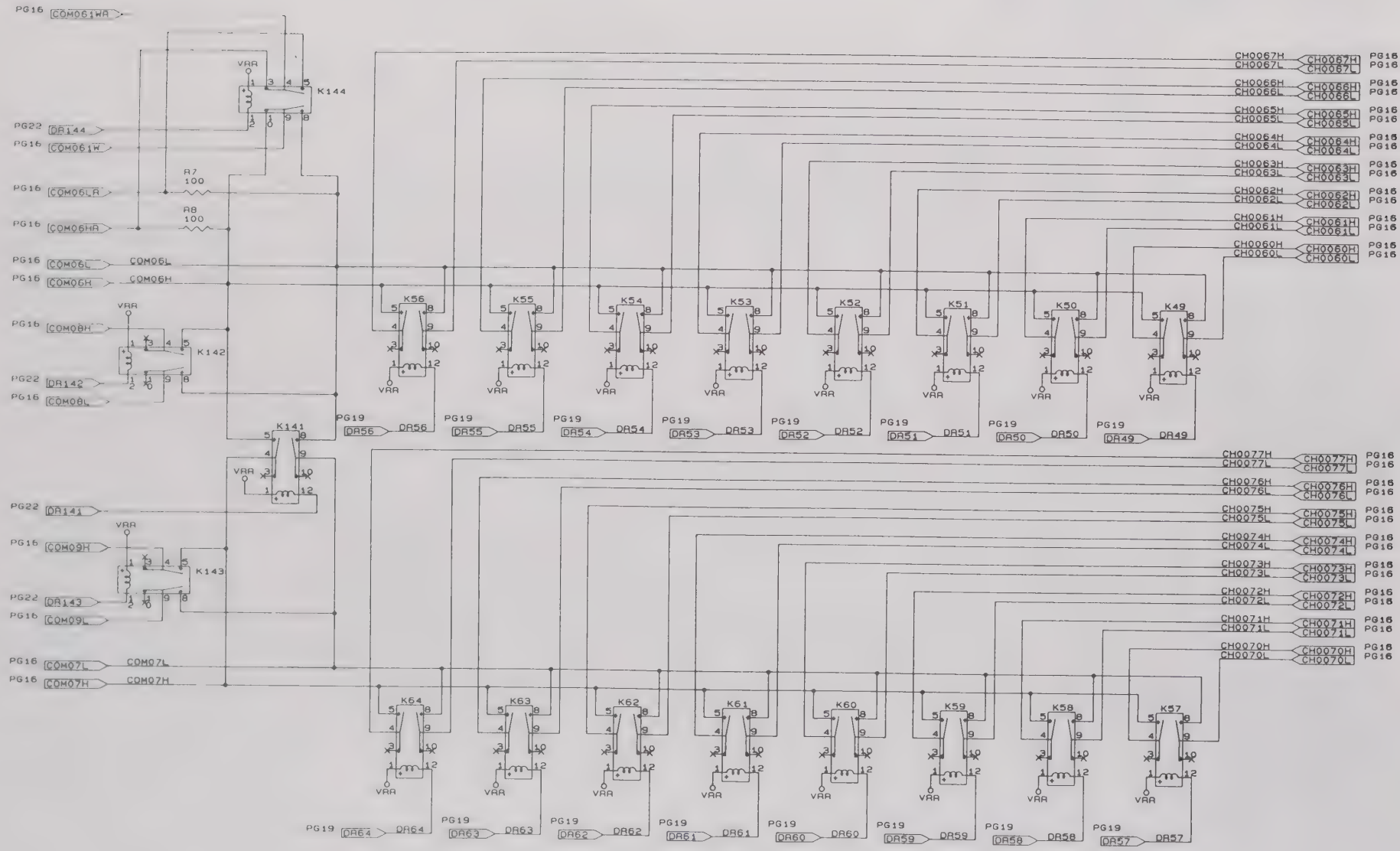

MULTIPLEXERS 06, 07

SIZE	CAGE CODE	DWG NO.	REV.
B	21793	435100	B
SCALE -----		CALC. VT / ACT. VT	SHEET 11

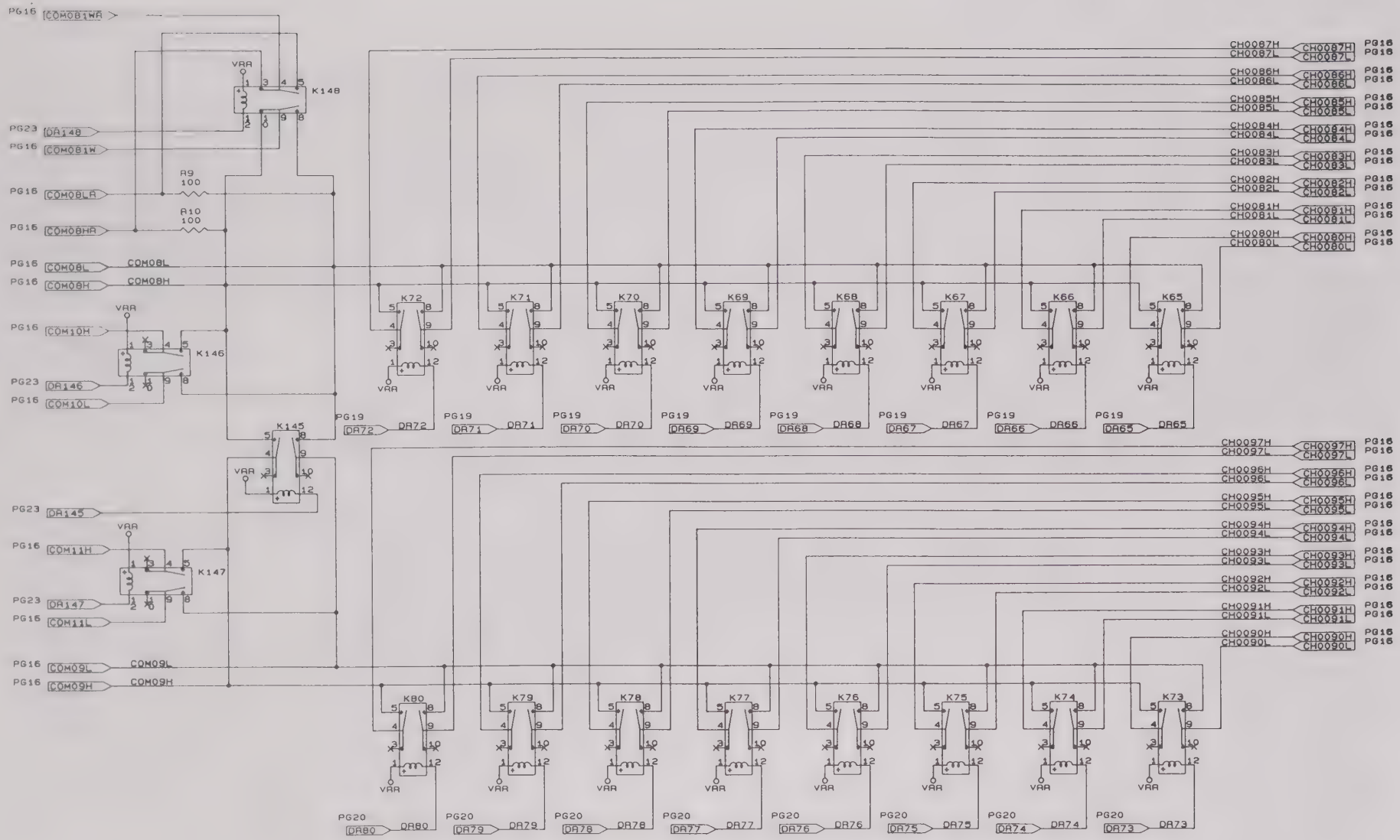

MULTIPLEXERS 08, 09

SIZE	CAGE CODE	DWG NO.	REV.
B	21793	435100	B
SCALE -----		CALC.VT / ACT.VT	SHEET 12

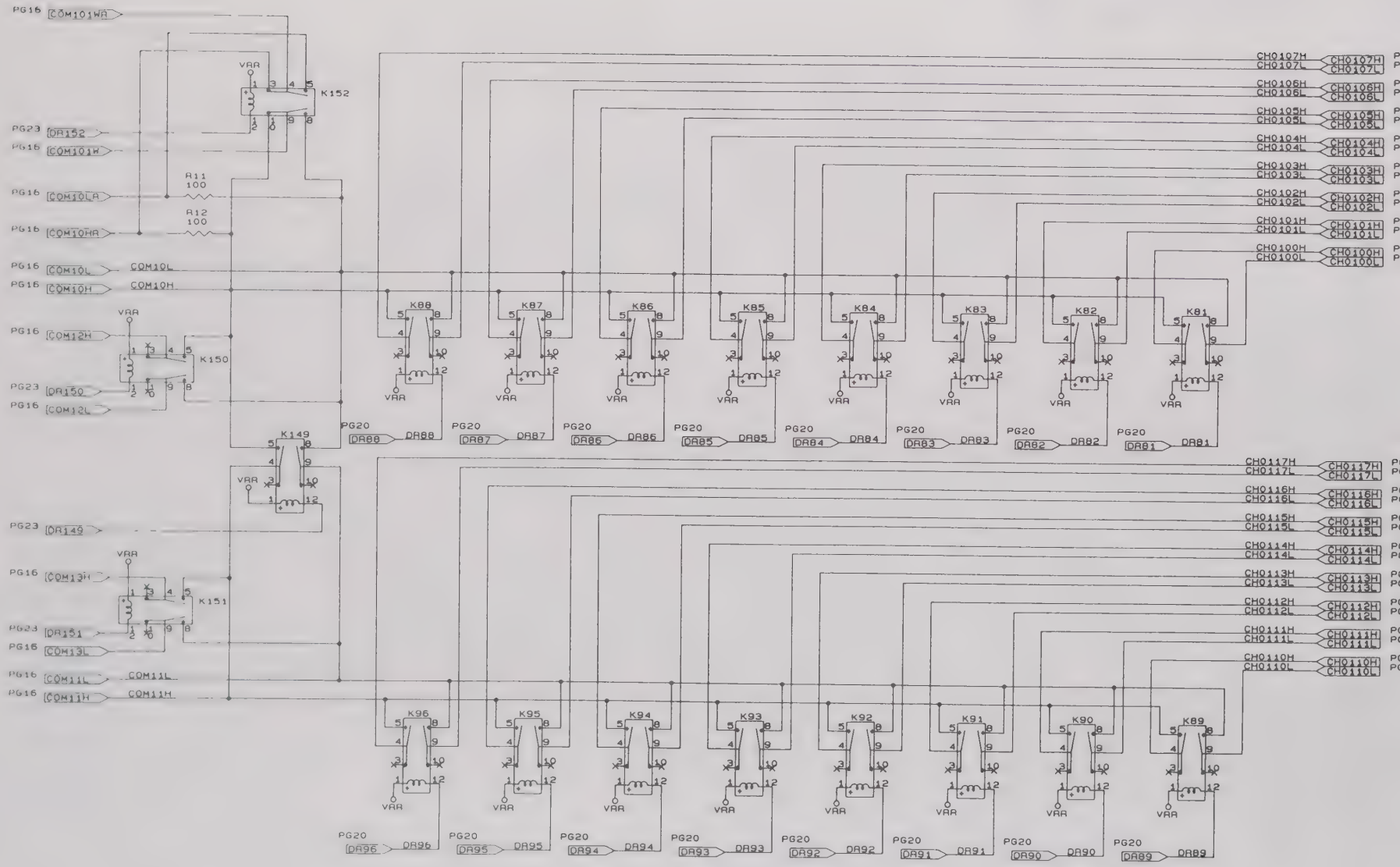

MULTIPLEXERS 10, 11

SIZE	CAGE CODE	DWG NO.	REV.
B	21793	435100	B
SCALE -----		CALC.VT ACT.VT	SHEET 13

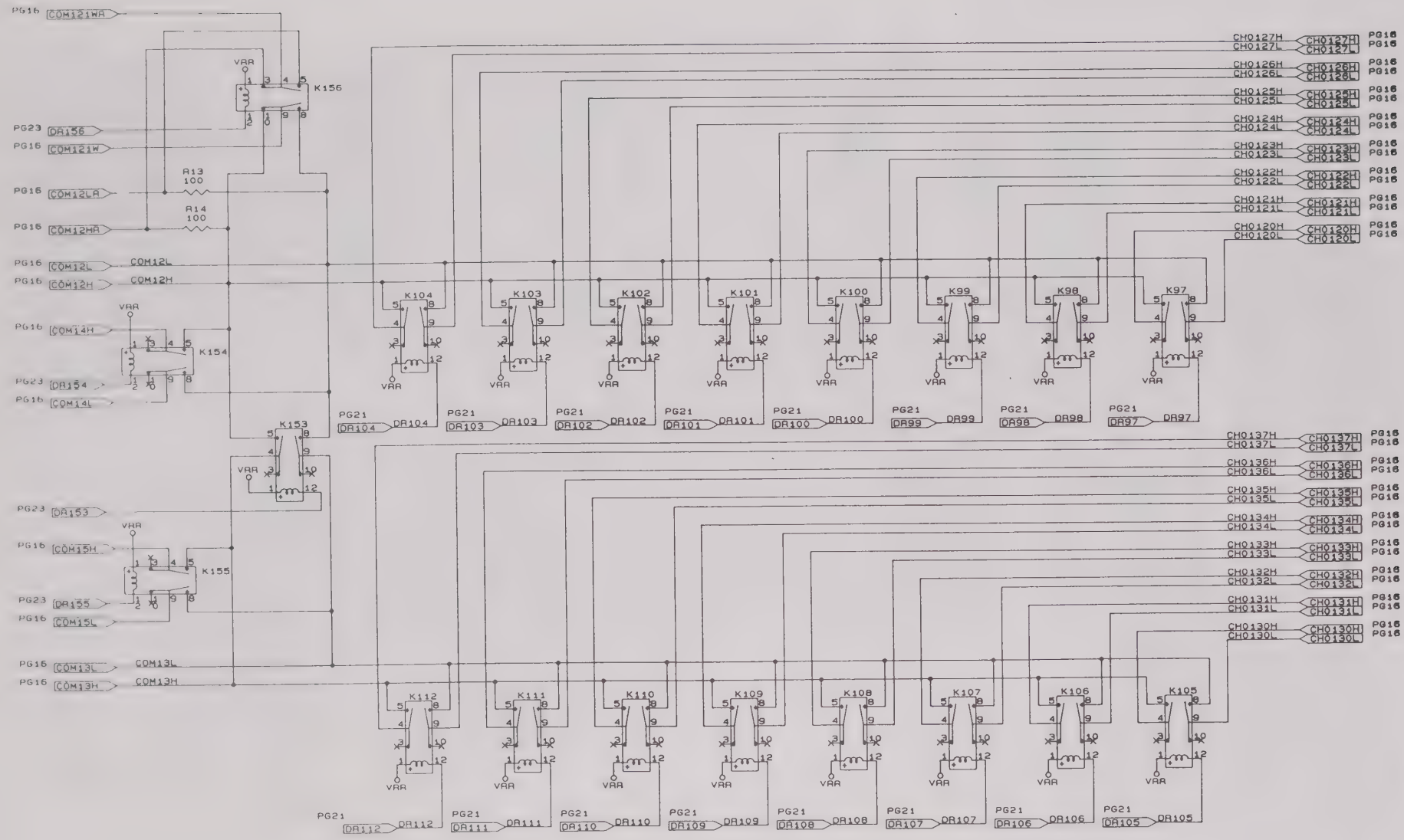

MULTIPLEXERS 12, 13

SIZE	CAGE CODE	DWG NO.	REV.
B	21793	435100	B
SCALE -----		CALC.VT ACT.VT	SHEET 14

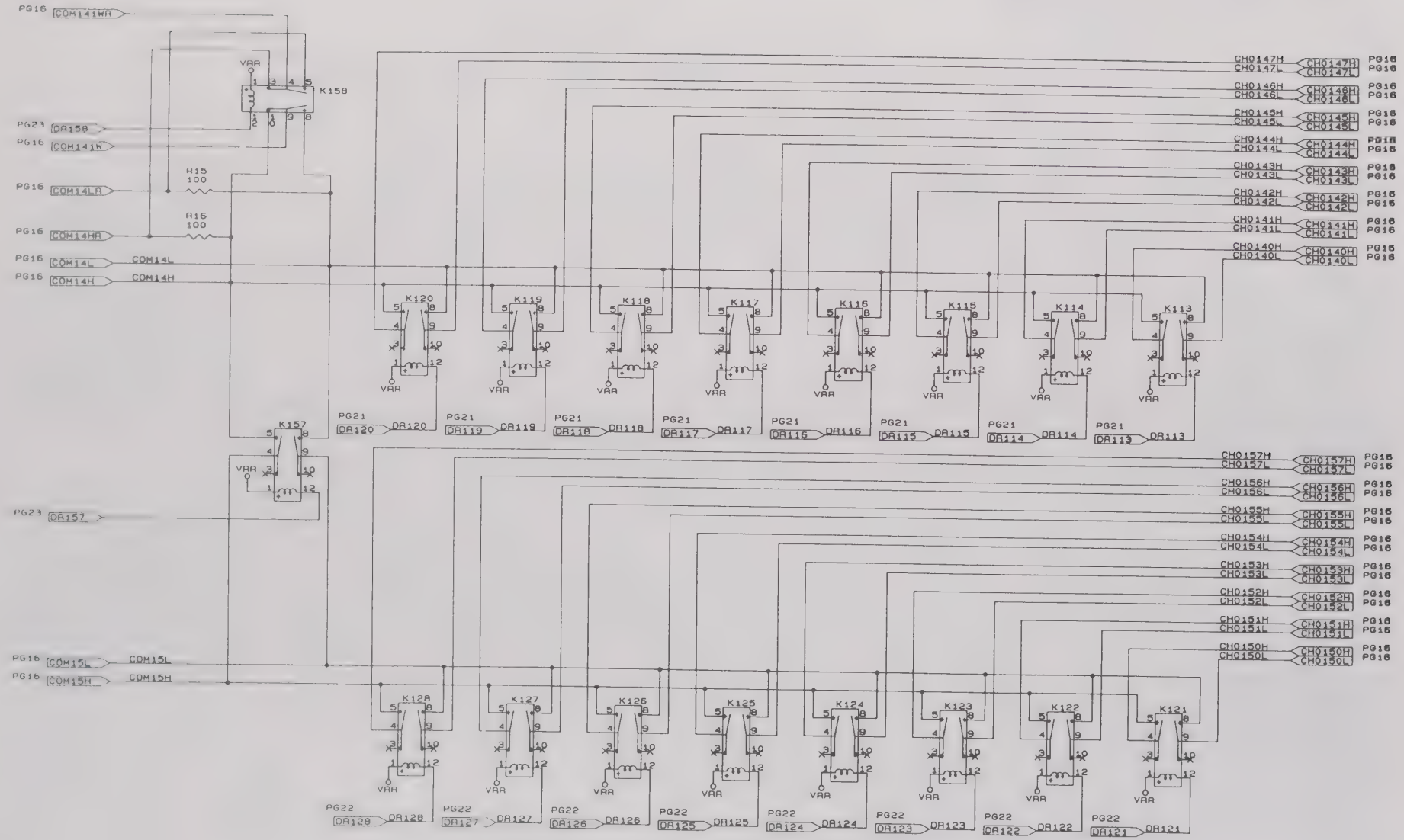

MULTIPLEXERS 14, 15

SIZE	CAGE CODE	DWG NO.	REV.
B	21793	435100	5
SCALE -----		CALC. WT / ACT. WT	SHEET 15

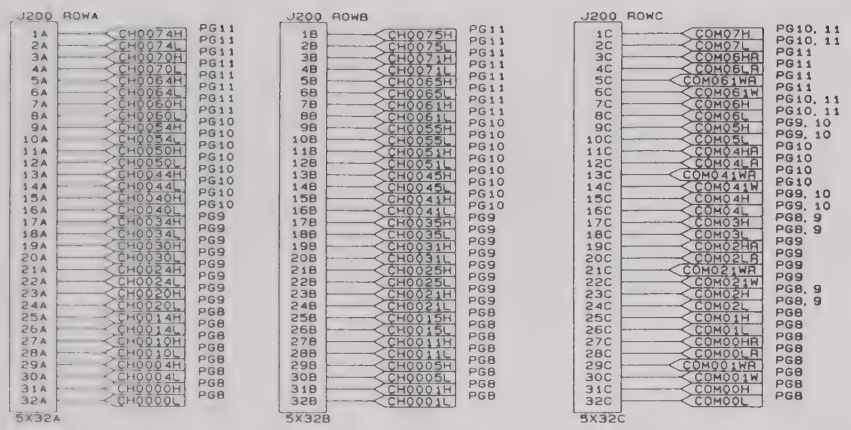

FRONT PANEL CONNECTORS

SIZE	CAGE CODE	DWG NO.	REV.
B	21793	435100	B
SCALE -----		CALC.VT ACT.VT	SHEET 16

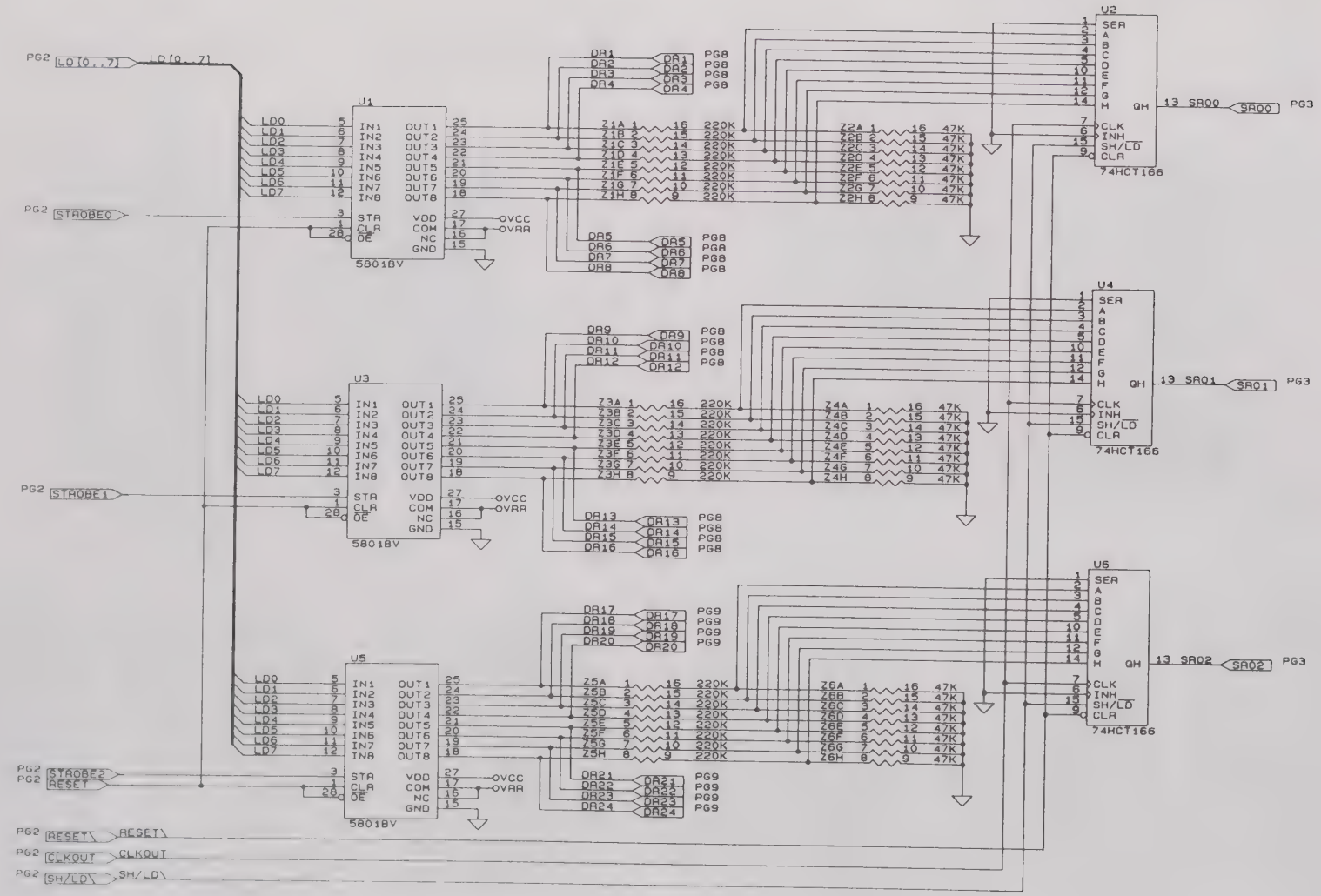

RELAY DRIVERS 1 - 24

SIZE	CAGE CODE	DWG NO.	REV.
B	21793	435100	B
SCALE -----		CALC.VT ACT.VT	SHEET 17

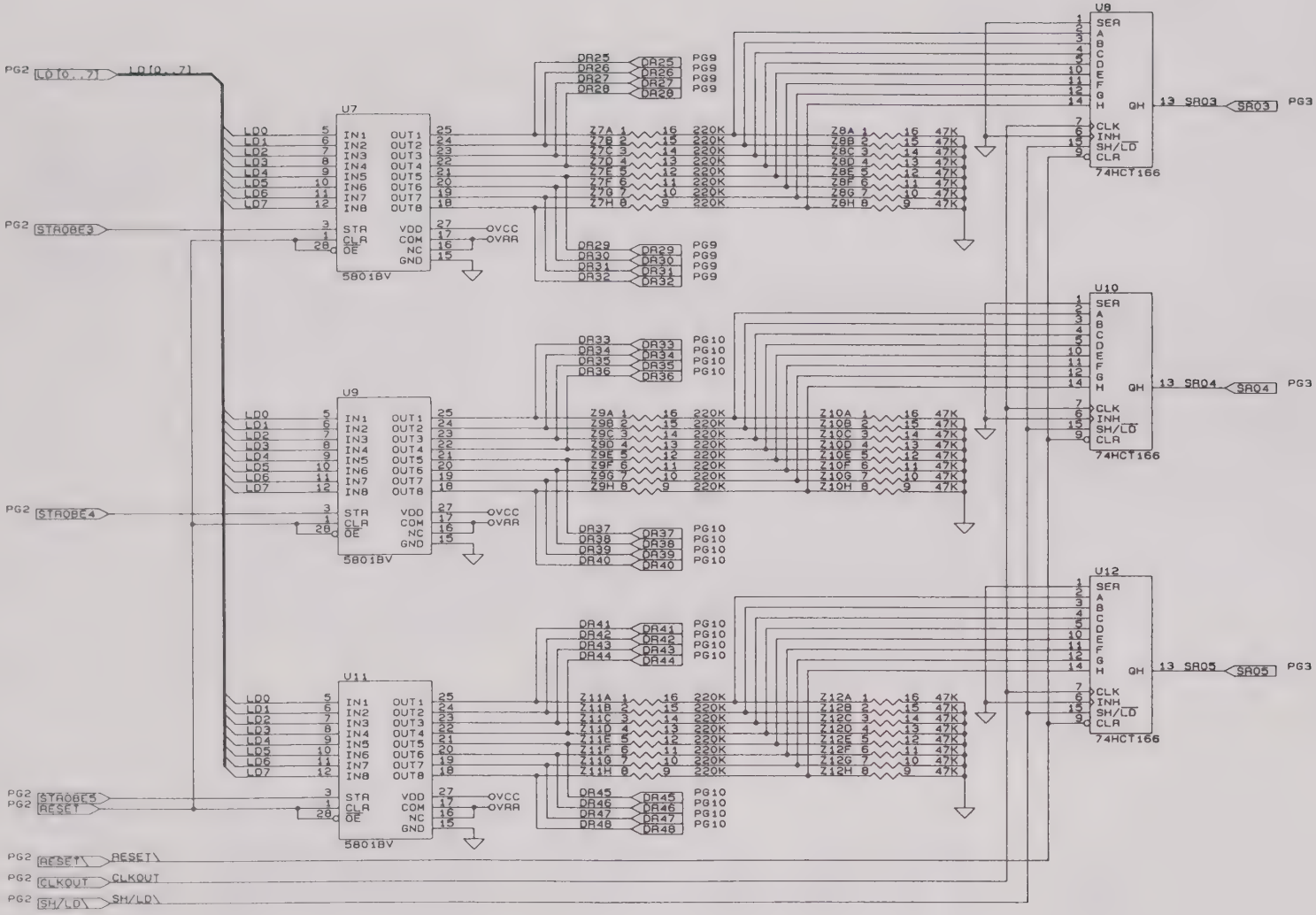

RELAY DRIVERS 25 - 48

SIZE	CAGE CODE	DWG NO.	REV.
B	21793	435100	B
SCALE -----		CALC.WT ACT.WT	SHEET 18

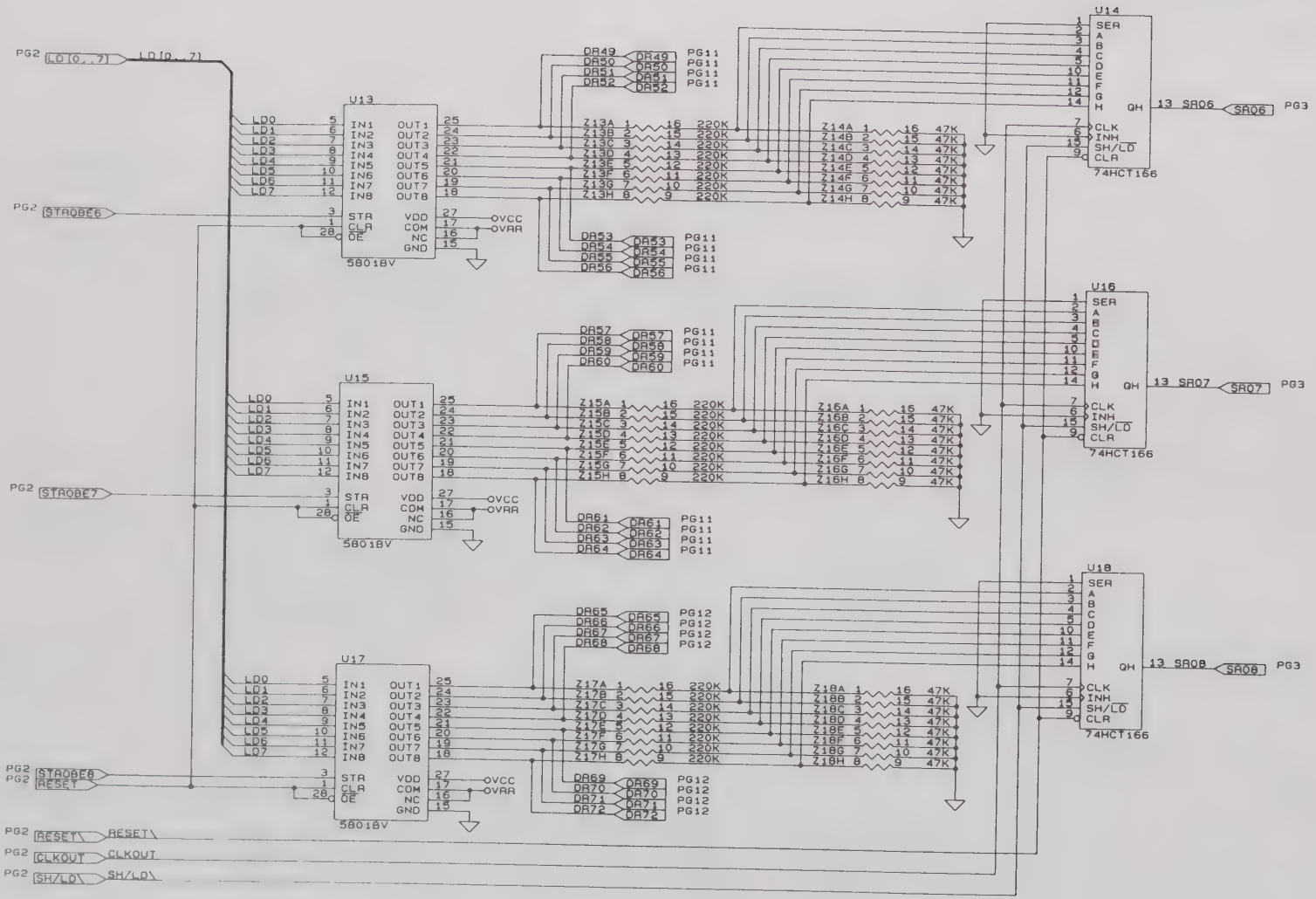

RELAY DRIVERS 49 - 72

SIZE	CAGE CODE	DWG NO.	REV.
B	21793	435100	B
SCALE -----		CALC.VT ACT.VT	SHEET 19

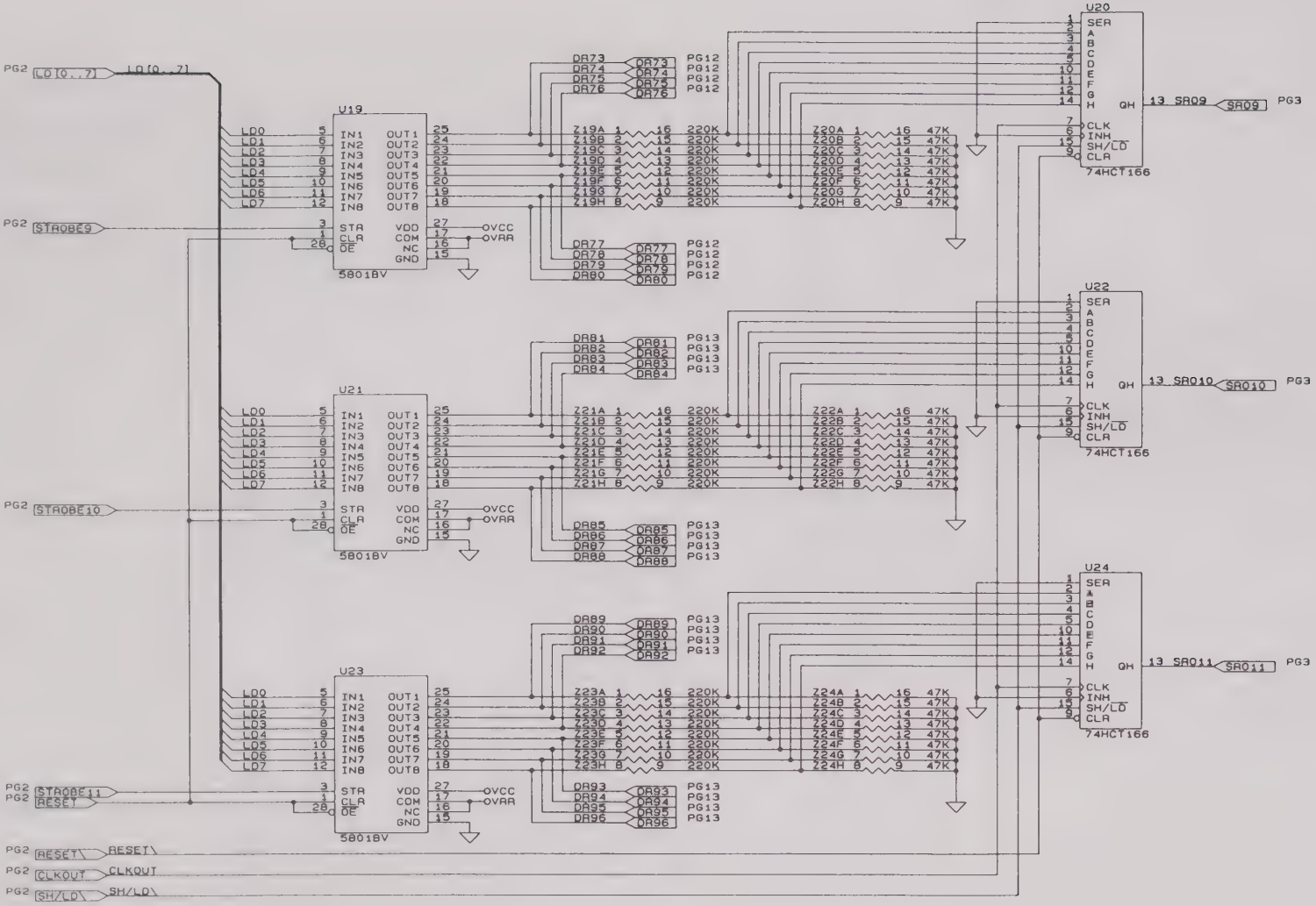

RELAY DRIVERS 73 - 96

SIZE	CAGE CODE	DWG NO.	REV.
B	21793	435100	B
SCALE -----		CALC.VT ACT.VT	SHEET 20

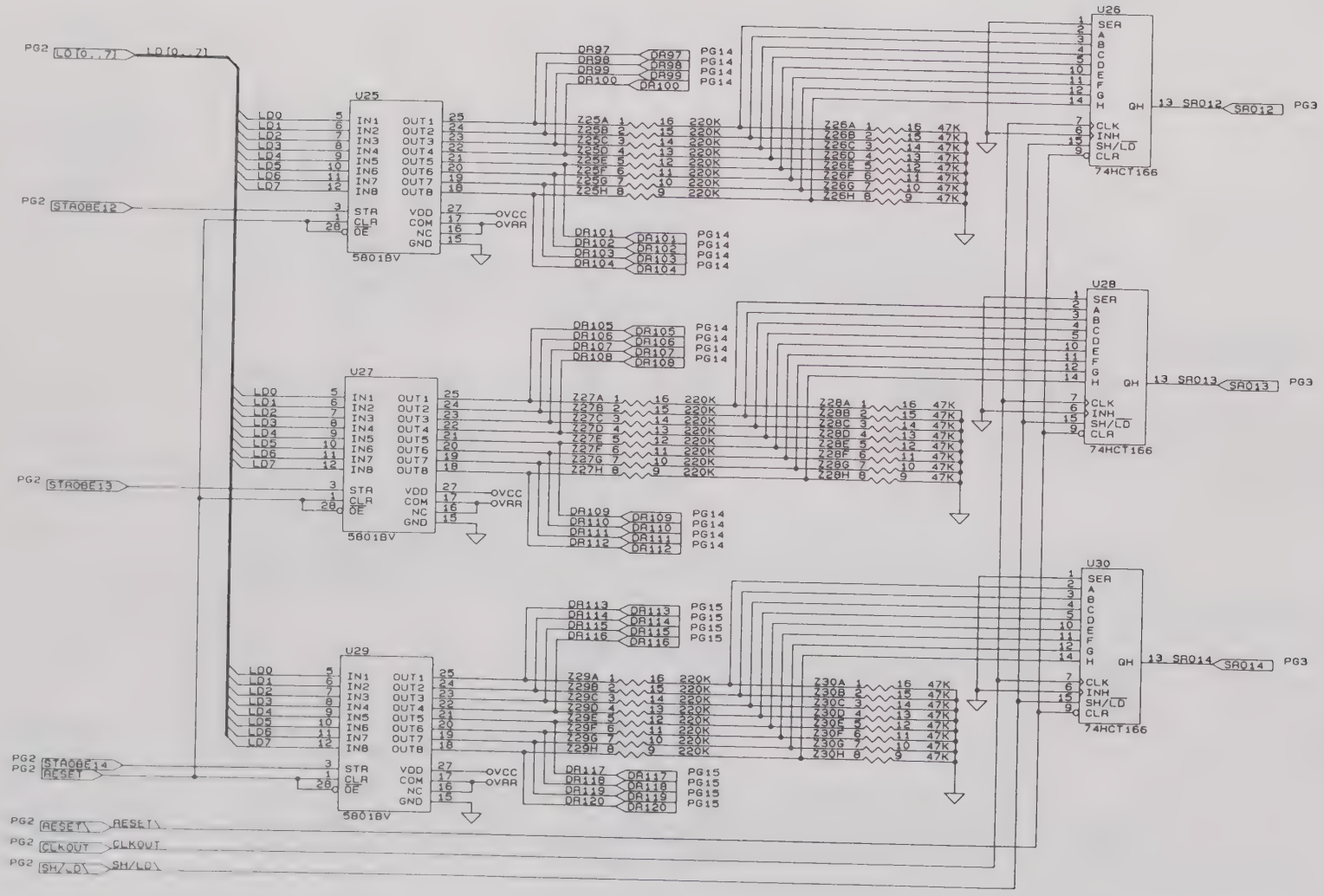

RELAY DRIVERS 97 - 120

SIZE	CAGE CODE	DWG NO.	REV.
B	21793	435100	B
SCALE -----		CALC.WT ACT.WT	SHEET 21

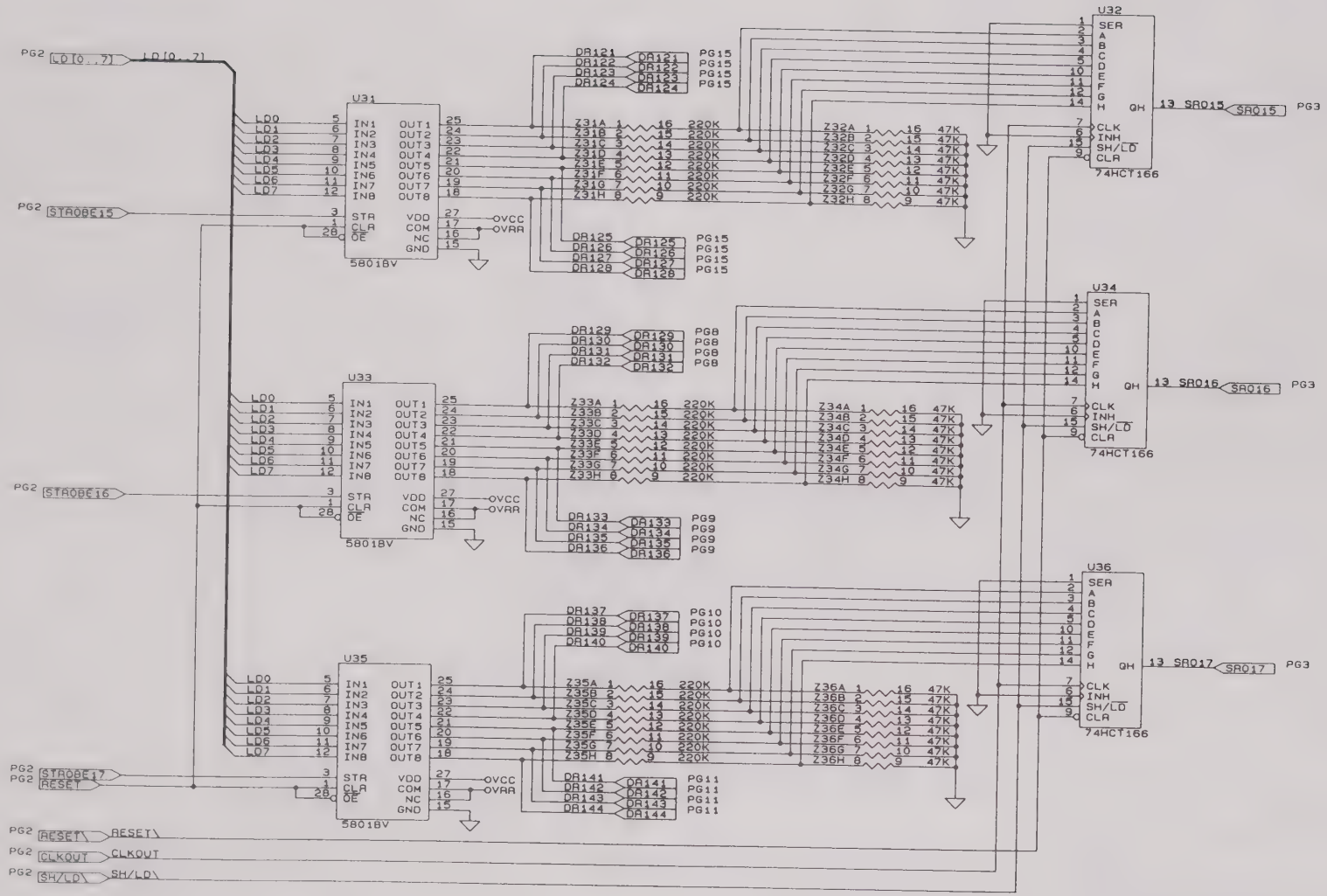

RELAY DRIVERS 121 - 144

SIZE	CAGE CODE	DWG NO.	REV.
B	21793	435100	B
SCALE -----		CALC.VT ACT.VT	SHEET 22

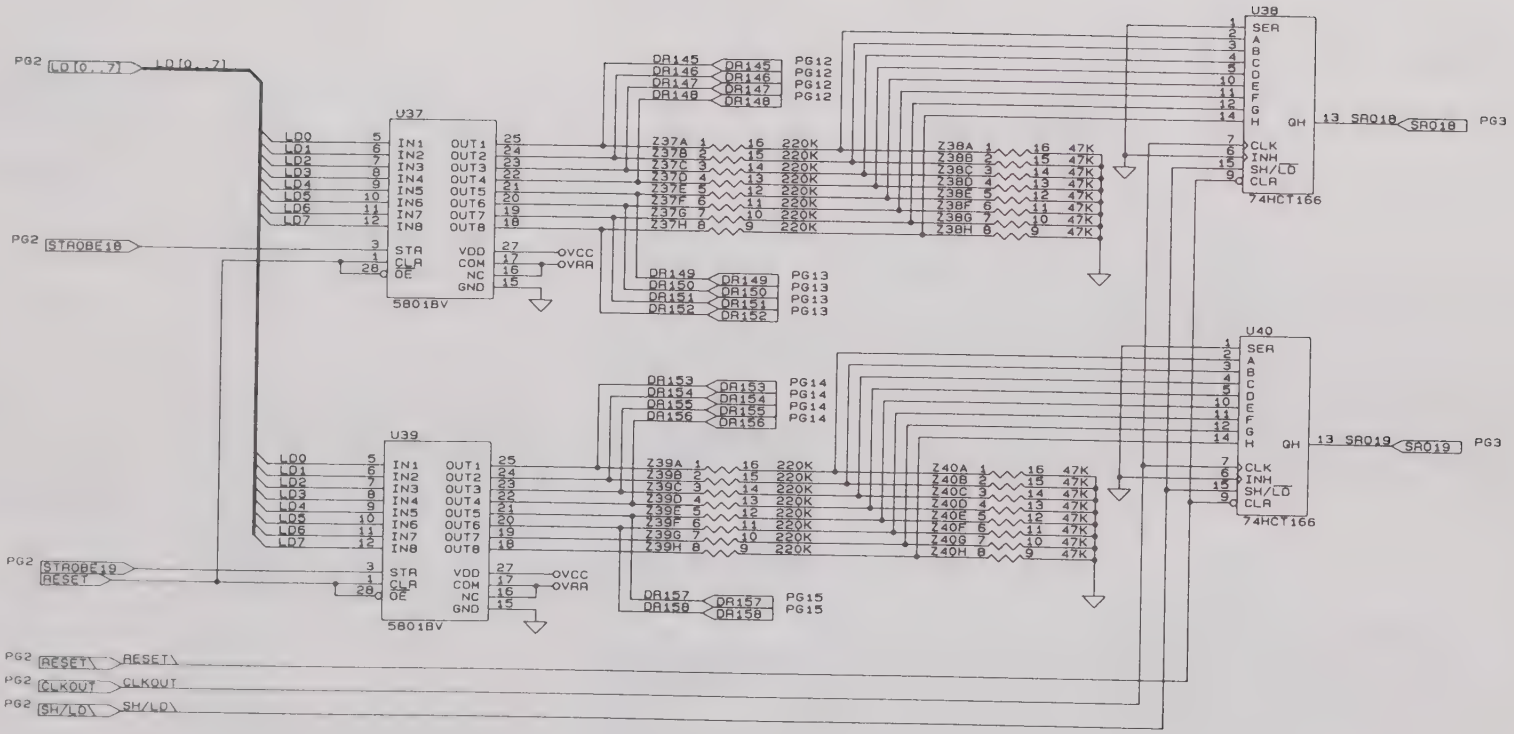

RELAY DRIVERS 145 - 158

SIZE	CAGE CODE	DWG NO.	REV.
B	21793	435100	B
SCALE -----		CALC,VT / ACT,VT	SHEET 23

NOTES:

1. BAG AND TAG ALL ITEMS, INCLUDING INSTRUCTION SHEET, WITH RACAL INSTRUMENTS PART NO. AND CURRENT REVISION LETTER.

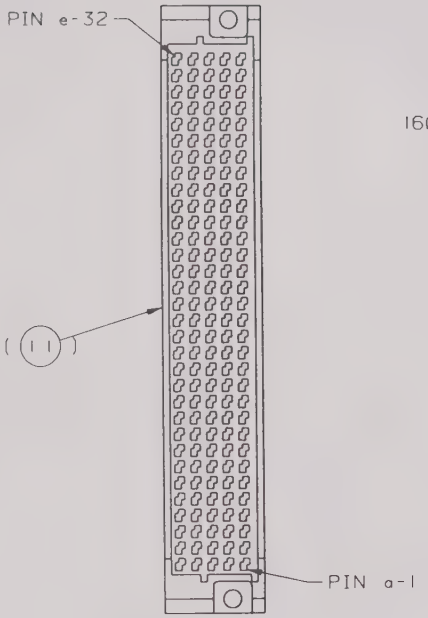

FRONT VIEW
(SHOWING CONNECTOR ONLY)

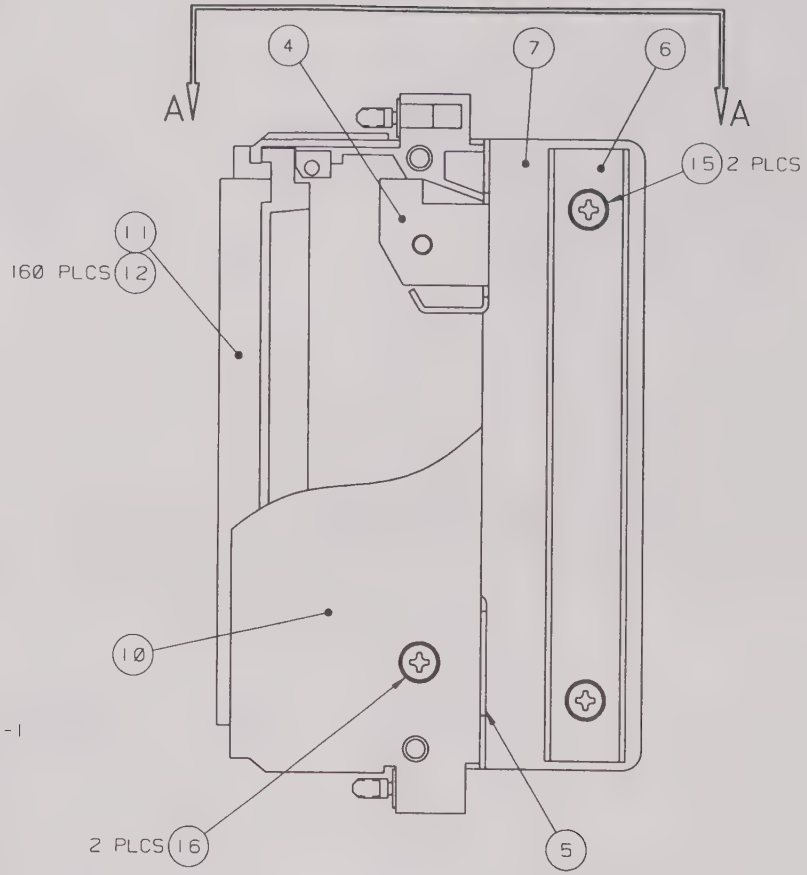

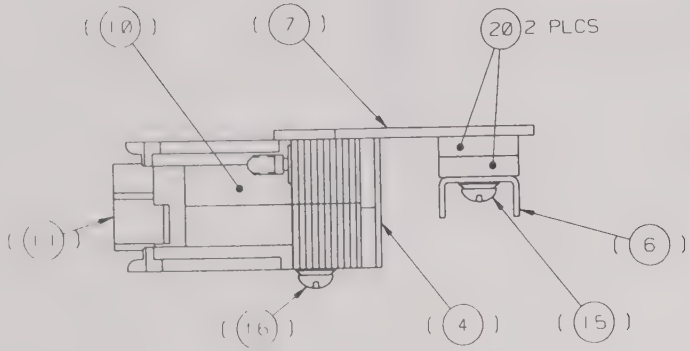

VIEW A-A

PROPRIETARY NOTICE

THIS DOCUMENT AND THE TECHNICAL DATA HEREIN DISCLOSED ARE PROPRIETARY TO RACAL INSTRUMENTS INC. AND SHALL NOT, WITHOUT THE EXPRESS WRITTEN PERMISSION OF RACAL INSTRUMENTS INC. BE USED, RELEASED OR DISCLOSED IN WHOLE OR IN PART, OR USED TO SOLICIT QUOTATIONS FROM A COMPETITIVE SOURCE OR USED FOR MANUFACTURE BY ANYONE OTHER THAN RACAL INSTRUMENTS INC. THE INFORMATION HEREON HAS BEEN DEVELOPED AT PRIVATE EXPENSE, AND MAY ONLY BE USED FOR PURPOSES OF ENGINEERING EVALUATION AND FOR INCORPORATION INTO TECHNICAL SPECIFICATIONS AND OTHER DOCUMENTS WHICH SPECIFY PROCUREMENT OF PRODUCTS FROM RACAL INSTRUMENTS INC.

RACAL Instruments, Inc.
4 Goodyear St., Irvine, CA. 92718-2002

TITLE
160 PIN CONN KIT W/BACKSHELL

SIZE	CAGE CODE	DWG NO.	REV.
D	21793	407407	A

SCALE 2:1 | CALC.WT | ACT.WT | SHEET 1 OF 2

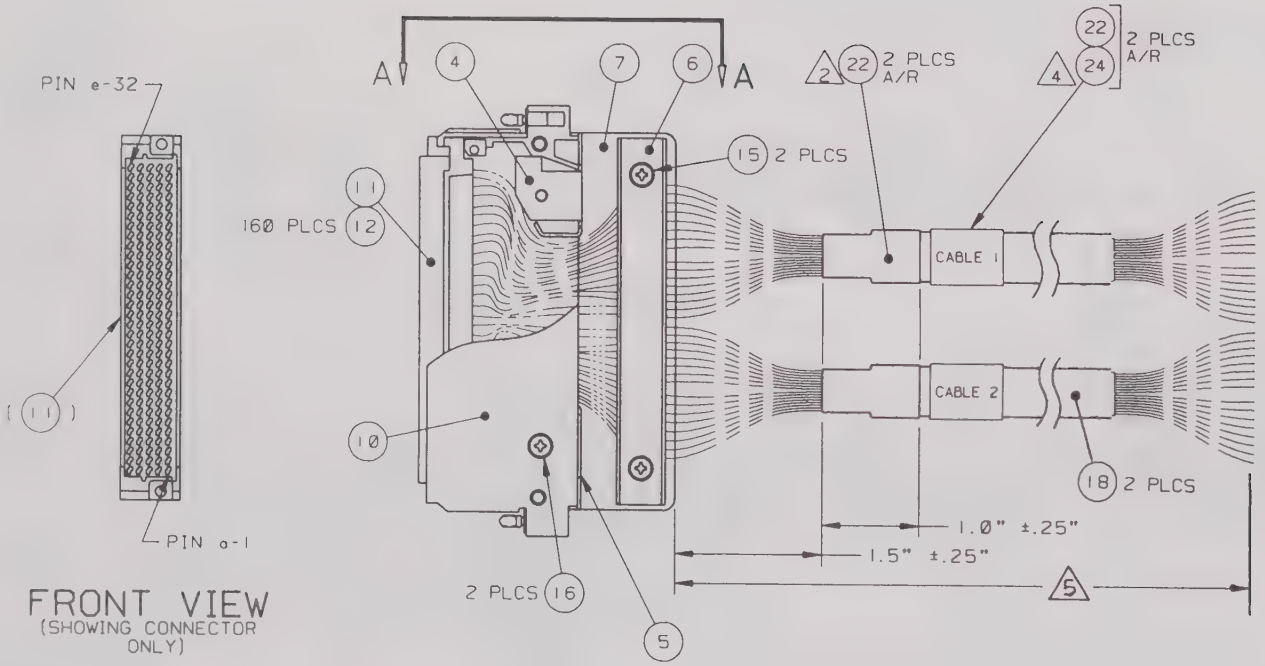

NOTES:

1. STICK ONE SPONGE (ITEM 20) TO THE STRAIN RELIEF (ITEM 6), AND THE OTHER ONE TO THE PLATE (ITEM 7).
2. TERMINATE CABLE INSULATION AS SHOWN, USING SHRINK TUBING (ITEM 22).
3. CABLES ARE TO BE BUILT IN PAIRS FOR EASE OF TESTING. TEST CABLE ASSY USING TEST PROCEDURE 951016. AFTER ASSY PASSES TEST, CUT THE CABLE IN HALF, MAKING TWO SEPARATE CABLE ASSEMBLIES.
4. IDENTIFY CABLES AS SHOWN USING INDELIBLE BLACK INK ON SHRINK TUBING (ITEM 24). COVER WITH SHRINK TUBING (ITEM 22) FOR IDENTIFICATION PROTECTION.
5. CABLE LENGTH: 6 FEET - P/N 407408
   12 FEET - P/N 407409

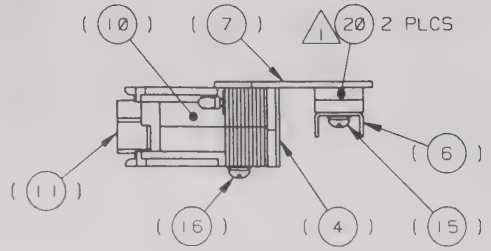

VIEW A-A
(CABLE NOT SHOWN)

PROPRIETARY NOTICE

THIS DOCUMENT AND THE TECHNICAL DATA HEREIN DISCLOSED ARE PROPRIETARY TO RACAL INSTRUMENTS INC AND SHALL NOT, WITHOUT THE EXPRESS WRITTEN PERMISSION OF RACAL INSTRUMENTS INC BE USED, RELEASED OR DISCLOSED IN WHOLE OR IN PART OR USED TO SOLICIT QUOTATIONS FROM A COMPETITIVE SOURCE OR USED FOR MANUFACTURE BY ANYONE OTHER THAN RACAL INSTRUMENTS INC THE INFORMATION HEREON HAS BEEN DEVELOPED AT PRIVATE EXPENSE AND MAY ONLY BE USED FOR PURPOSES OF ENGINEERING EVALUATION AND FOR INCORPORATION INTO TECHNICAL SPECIFICATIONS AND OTHER DOCUMENTS WHICH SPECIFY PROCUREMENT OF PRODUCTS FROM RACAL INSTRUMENTS INC

RACAL Instruments, Inc.			
4 Goodyear St., Irvine, CA. 92718-2002			
160 PIN CABLE ASSY, 24 GA			
SIZE C	CAGE CODE 21793	DWG NO. 407408, 407409	REV. A
SCALE 1/1		CALC WT	ACT WT
SHEET 1 OF 18			

5.0 Parts List

407410	Final Assy, 1260-38	5-2
407417	Shipping Kit, 1260-38	5-2
405100	PCB Assy, 1260-38	5-3

Front Panel Connector Accessories

407407	160-Pin Connector Kit with backshell and pins	5-6
407408	160-Pin Cable Assy, 6ft, 24GA	5-7
407409	160-Pin Cable Assy, 12ft, 24GA	5-7

List of Suppliers 5-8

407410 - FINAL ASSY, 1260-38

REF DESIG	RACAL INST P/N	DESCRIPTION	FSC	MANUFACTURER'S P/N
{1}1	921423	LABEL, CE MARKING	21793	921423
{6}1	407417	SHIP KIT, 1260-38	21793	407417
{7}1	405100	PCB ASSY, 1260-38	21793	405100
{10}1	456238-002	PANEL, RIGHT, 1260-35	21793	456238-002
{11}2	456438-001	BRACKET, CONNECTOR MOUNTING, TOP	21793	456438-001
{12}2	456438-002	BRACKET, CONNECTOR MOUNTING, BOTTOM	21793	456438-002
{13}1	456239-002	PANEL, LEFT, 1260-35	21793	456239-002
{16}1	456441	PANEL, FRONT, 1260-38	21793	456441
{18}1	611264	HANDLE, EXTRACTOR, BOTTOM	62559	20817-327
{19}1	611265	HANDLE, EXTRACTOR, TOP	62559	20817-328
{20}0.5	611266	MOUNTING HARDWARE, HANDLE	62559	21100-745
{23}4	616305	SCREW, PPH, M2.5X.045X12	-	-
{24}8	616400	SCREW, PFL, M2.5X.45	-	-
{28}2	616405	SCREW, PFH, M2.5-.45 X 12	-	-
{29}6	616414	SCREW, PFL, M3X.50X5	-	-
{30}4	617127	WASHER, LOCK, #4, LIGHT SERIES	-	-
{32}1	920927	BUMPER, ADHESIVE BACK	53387	SJ-5003BUMPON
{35}1	921059	LABEL, CAUTION, STATIC	21793	921059
{36}	921148-001	LABEL SET VXI	21793	921148-001
{37}1	921309	LABEL, VXI SWITCH ID	21793	921309

407417 - SHIP KIT, 1260-38

REF DESIG	RACAL INST P/N	DESCRIPTION	FSC	MANUFACTURER'S P/N
{1}2	455540	KEY, LOCKOUT, TTL, A/C	21793	455540
{2}2	455541	KEY, LOCKOUT, TTL, A/C	21793	455541
{3}2	455542	KEY, LOCKOUT, TTL, A/C	21793	455542
{5}3	615013	SCREW, PPH 2-56 X .188	-	-
{6}1	980673-037	MANUAL, 1260-38 MODULE	21793	980673-037

405100 PCB, ASSY 1260-38

REF DESIG	RACAL INST P/N	DESCRIPTION	FSC	MANUFACTURER'S P/N
C1-C4	110126	CAP, TANTA, 6.8UF, 35V, 20 PERCENT	05397	T355F685M035A5
C5	R-21-1801	CAP, CHIP, 10 NF	95275	VJ1206Y103MF
C6	R-21-1801	CAP, CHIP, 10 NF	95275	VJ1206Y103MF
C100-C102	R-21-1801	CAP, CHIP, 10 NF	95275	VJ1206Y103MF
C103	130198	CAP, CHIP, 150NF, 35V, 10PCT	04222	TAJA154K035R
C104-C106	R-21-1801	CAP, CHIP, 10 NF	95275	VJ1206Y103MF
C108	R-21-1801	CAP, CHIP, 10 NF	95275	VJ1206Y103MF
C110	R-21-1801	CAP, CHIP, 10 NF	95275	VJ1206Y103MF
C113	R-21-1801	CAP, CHIP, 10 NF	95275	VJ1206Y103MF
C116-C118	R-21-1801	CAP, CHIP, 10 NF	95275	VJ1206Y103MF
C120-C125	R-21-1801	CAP, CHIP, 10 NF	95275	VJ1206Y103MF
C127-C144	R-21-1801	CAP, CHIP, 10 NF	95275	VJ1206Y103MF
C166	R-21-1801	CAP, CHIP, 10 NF	95275	VJ1206Y103MF
C167	R-21-1801	CAP, CHIP, 10 NF	95275	VJ1206Y103MF
J3	601925	CONNECTOR, PCB, RECEPT, 3 ROW, 96P	52072	618008
J4	601925	CONNECTOR, PCB, RECEPT, 3 ROW, 96P	52072	618008
J200	602249-116	CONNECTOR, PCB, PLUG, 160 PIN, 5 ROW	58730	MVC160-012-2
J201	602249-116	CONNECTOR, PCB, PLUG, 160 PIN, 5 ROW	58730	MVC160-012-2
K1-K158	310256	RELAY, ELECTRO-MECH, 2P2T, 2A,24V	61529	TX2-24V
L1	100164	CAP, FEED-THRU,800PF, 50V	00779	842448-2
L2	310193	CHOKE, SHIELDED, 5UH	91637	IH-5-5-10
L3	310193	CHOKE, SHIELDED, 5UH	91637	IH-5-5-10
L4	100164	CAP, FEED-THRU,800PF, 50V	00779	842448-2
L5	600245	JUMPER, INSULATED	52210	L-2007-1
P1	601675	CONNECTOR, EUROCARD TYPE C, 96-PIN	00779	532505-1
P2	601675	CONNECTOR, EUROCARD TYPE C, 96-PIN	00779	532505-1
Q1	200320	TRANSISTOR, NPN	04713	MMBT3904
R1-R16	001909	RES, CARBON, 100 OHMS, 150V, 1/8W, 5PCT	01121	BB1015
R17	050000-102	RES, CHIP, 1K, .06W, 5PCT	91637	CRCW-0805SERIES
R18	050000-332	RES, CHIP, 3.3K, .06W, 5PCT	91637	CRCW0805SERIES
R19	050000-102	RES, CHIP, 1K, .06W, 5PCT	91637	CRCW-0805SERIES
R20	050000-102	RES, CHIP, 1K, .06W, 5PCT	91637	CRCW-0805SERIES
SW1-SW3	601969	SWITCH, DIP 6 POS, LOW PROFILE	65832	K406S
TP1	601197	POST, TEST, .025 SQ	00779	6-87022-6
TP2	601197	POST, TEST, .025 SQ	00779	6-87022-6
U1	231555	IC, 4/8 BIT PARALLEL-INPUT LATCHED DRIVERS	60496	MIC5801BV
U2	231120	IC, 8-BIT, PARALLEL/SERIAL OUT S.R.	18324	74HCT166D
U3	231555	IC, 4/8 BIT PARALLEL-INPUT LATCHED DRIVERS	60496	MIC5801BV
U4	231120	IC, 8-BIT, PARALLEL/SERIAL OUT S.R.	18324	74HCT166D
U5	231555	IC, 4/8 BIT PARALLEL-INPUT LATCHED DRIVERS	60496	MIC5801BV
U6	231120	IC, 8-BIT, PARALLEL/SERIAL OUT S.R.	18324	74HCT166D
U7	231555	IC, 4/8 BIT PARALLEL-INPUT LATCHED DRIVERS	60496	MIC5801BV
U8	231120	IC, 8-BIT, PARALLEL/SERIAL OUT S.R.	18324	74HCT166D
U9	231555	IC, 4/8 BIT PARALLEL-INPUT LATCHED DRIVERS	60496	MIC5801BV
U10	231120	IC, 8-BIT, PARALLEL/SERIAL OUT S.R.	18324	74HCT166D
U11	231555	IC, 4/8 BIT PARALLEL-INPUT LATCHED DRIVERS	60496	MIC5801BV
U12	231120	IC, 8-BIT, PARALLEL/SERIAL OUT S.R.	18324	74HCT166D
U13	231555	IC, 4/8 BIT PARALLEL-INPUT LATCHED DRIVERS	60496	MIC5801BV
U14	231120	IC, 8-BIT, PARALLEL/SERIAL OUT S.R.	18324	74HCT166D
U15	231555	IC, 4/8 BIT PARALLEL-INPUT LATCHED DRIVERS	60496	MIC5801BV
U16	231120	IC, 8-BIT, PARALLEL/SERIAL OUT S.R.	18324	74HCT166D
U17	231555	IC, 4/8 BIT PARALLEL-INPUT LATCHED DRIVERS	60496	MIC5801BV
U18	231120	IC, 8-BIT, PARALLEL/SERIAL OUT S.R.	18324	74HCT166D
U19	231555	IC, 4/8 BIT PARALLEL-INPUT LATCHED DRIVERS	60496	MIC5801BV
U20	231120	IC, 8-BIT, PARALLEL/SERIAL OUT S.R.	18324	74HCT166D
U21	231555	IC, 4/8 BIT PARALLEL-INPUT LATCHED DRIVERS	60496	MIC5801BV
U22	231120	IC, 8-BIT, PARALLEL/SERIAL OUT S.R.	18324	74HCT166D
U23	231555	IC, 4/8 BIT PARALLEL-INPUT LATCHED DRIVERS	60496	MIC5801BV
U24	231120	IC, 8-BIT, PARALLEL/SERIAL OUT S.R.	18324	74HCT166D

405100 PCB, ASSY 1260-38

REF DESIG	RACAL INST P/N	DESCRIPTION	FSC	MANUFACTURER'S P/N
U25	231555	IC, 4/8 BIT PARALLEL-INPUT LATCHED DRIVERS	60496	MIC5801BV
U26	231120	IC, 8-BIT, PARALLEL/SERIAL OUT S.R.	18324	74HCT166D
U27	231555	IC, 4/8 BIT PARALLEL-INPUT LATCHED DRIVERS	60496	MIC5801BV
U28	231120	IC, 8-BIT, PARALLEL/SERIAL OUT S.R.	18324	74HCT166D
U29	231555	IC, 4/8 BIT PARALLEL-INPUT LATCHED DRIVERS	60496	MIC5801BV
U30	231120	IC, 8-BIT, PARALLEL/SERIAL OUT S.R.	18324	74HCT166D
U31	231555	IC, 4/8 BIT PARALLEL-INPUT LATCHED DRIVERS	60496	MIC5801BV
U32	231120	IC, 8-BIT, PARALLEL/SERIAL OUT S.R.	18324	74HCT166D
U33	231555	IC, 4/8 BIT PARALLEL-INPUT LATCHED DRIVERS	60496	MIC5801BV
U34	231120	IC, 8-BIT, PARALLEL/SERIAL OUT S.R.	18324	74HCT166D
U35	231555	IC, 4/8 BIT PARALLEL-INPUT LATCHED DRIVERS	60496	MIC5801BV
U36	231120	IC, 8-BIT, PARALLEL/SERIAL OUT S.R.	18324	74HCT166D
U37	231555	IC, 4/8 BIT PARALLEL-INPUT LATCHED DRIVERS	60496	MIC5801BV
U38	231120	IC, 8-BIT, PARALLEL/SERIAL OUT S.R.	18324	74HCT166D
U39	231555	IC, 4/8 BIT PARALLEL-INPUT LATCHED DRIVERS	60496	MIC5801BV
U40	231120	IC, 8-BIT, PARALLEL/SERIAL OUT S.R.	18324	74HCT166D
U53	231153-001	IC, PROGRAMMED, PAL	21793	231153-001
U54	231445	IC, 3-TO-8 LINE DECODER/MUX	18324	74HCT138D
U55	231445	IC, 3-TO-8 LINE DECODER/MUX	18324	74HCT138D
U56	231135	IC, DIGITAL, 4-BIT COMPARATOR	18324	PC74HCT85D
U57	231093	IC, QUAD COMPARATOR	04713	LM339D
U60	231120	IC, 8-BIT, PARALLEL/SERIAL OUT S.R.	18324	74HCT166D
U61	231131	IC, DIGITAL, SHIFT REGISTER	18324	PC74HCT164D
U62	231131	IC, DIGITAL, SHIFT REGISTER	18324	PC74HCT164D
U70	231152-002	IC, PROGRAMMED, PAL	21793	231152-002
U71	231147	IC, MULTIPLEXER	04713	74HC253D
U72	231147	IC, MULTIPLEXER	04713	74HC253D
U73	231096	IC, QUAD DIFF RECEIVER	01295	AM26LS32ACD
U74	231096	IC, QUAD DIFF RECEIVER	01295	AM26LS32ACD
U75	231125	IC, DIGITAL, LINE DRIVER	27014	DS26LS31MN
U76	231154	IC, PROGRAMMED PLA	21793	231154
U77	231147	IC, MULTIPLEXER	04713	74HC253D
U78	231445	IC, 3-TO-8 LINE DECODER/MUX	18324	74HCT138D
U79	231091	IC, OCTAL BUFFER	18324	74HC240D
U80	231091	IC, OCTAL BUFFER	18324	74HC240D
U81	231091	IC, OCTAL BUFFER	18324	74HC240D
U82	231119	IC, SHIFT REGISTER	18324	74HCT299D
U83	231147	IC, MULTIPLEXER	04713	74HC253D
Z1	080119	RES NETWORK, 220K	91637	SOMC-1603-224K
Z2	080117	RES NETWORK, 16P8R, 47K	73138	628-AL-473J
Z3	080119	RES NETWORK, 220K	91637	SOMC-1603-224K
Z4	080117	RES NETWORK, 16P8R, 47K	73138	628-AL-473J
Z5	080119	RES NETWORK, 220K	91637	SOMC-1603-224K
Z6	080117	RES NETWORK, 16P8R, 47K	73138	628-AL-473J
Z7	080119	RES NETWORK, 220K	91637	SOMC-1603-224K
Z8	080117	RES NETWORK, 16P8R, 47K	73138	628-AL-473J
Z9	080119	RES NETWORK, 220K	91637	SOMC-1603-224K
Z10	080117	RES NETWORK, 16P8R, 47K	73138	628-AL-473J
Z11	080119	RES NETWORK, 220K	91637	SOMC-1603-224K
Z12	080117	RES NETWORK, 16P8R, 47K	73138	628-AL-473J
Z13	080119	RES NETWORK, 220K	91637	SOMC-1603-224K
Z14	080117	RES NETWORK, 16P8R, 47K	73138	628-AL-473J
Z15	080119	RES NETWORK, 220K	91637	SOMC-1603-224K
Z16	080117	RES NETWORK, 16P8R, 47K	73138	628-AL-473J
Z17	080119	RES NETWORK, 220K	91637	SOMC-1603-224K
Z18	080117	RES NETWORK, 16P8R, 47K	73138	628-AL-473J
Z19	080119	RES NETWORK, 220K	91637	SOMC-1603-224K
Z20	080117	RES NETWORK, 16P8R, 47K	73138	628-AL-473J
Z21	080119	RES NETWORK, 220K	91637	SOMC-1603-224K

405100 PCB, ASSY 1260-38

REF DESIG	RACAL INST P/N	DESCRIPTION	FSC	MANUFACTURER'S P/N
Z22	080117	RES NETWORK, 16P8R, 47K	73138	628-AL-473J
Z23	080119	RES NETWORK, 220K	91637	SOMC-1603-224K
Z24	080117	RES NETWORK, 16P8R, 47K	73138	628-AL-473J
Z25	080119	RES NETWORK, 220K	91637	SOMC-1603-224K
Z26	080117	RES NETWORK, 16P8R, 47K	73138	628-AL-473J
Z27	080119	RES NETWORK, 220K	91637	SOMC-1603-224K
Z28	080117	RES NETWORK, 16P8R, 47K	73138	628-AL-473J
Z29	080119	RES NETWORK, 220K	91637	SOMC-1603-224K
Z30	080117	RES NETWORK, 16P8R, 47K	73138	628-AL-473J
Z31	080119	RES NETWORK, 220K	91637	SOMC-1603-224K
Z32	080117	RES NETWORK, 16P8R, 47K	73138	628-AL-473J
Z33	080119	RES NETWORK, 220K	91637	SOMC-1603-224K
Z34	080117	RES NETWORK, 16P8R, 47K	73138	628-AL-473J
Z35	080119	RES NETWORK, 220K	91637	SOMC-1603-224K
Z36	080117	RES NETWORK, 16P8R, 47K	73138	628-AL-473J
Z37	080119	RES NETWORK, 220K	91637	SOMC-1603-224K
Z38	080117	RES NETWORK, 16P8R, 47K	73138	628-AL-473J
Z39	080119	RES NETWORK, 220K	91637	SOMC-1603-224K
Z40	080117	RES NETWORK, 16P8R, 47K	73138	628-AL-473J
Z127	080114	RES NETWORK, 16P8R, 15K	73138	628-AL-153J
Z128	080120	RES NETWORK, 10K	11236	767-161R10K
{58}1	401951	PCB ASSY., LBUS JUMPER	21793	401951
{59}1	401951-003	PCB ASSY., P3 JUMPER	21793	401951-003
{60}1	415100	PCB, 1260-38 (UNLOADED)	21793	415100
{64}A/R	500022	WIRE, BARE COPPER/TIN, 22 GA	21793	500022
{81}2	611367	STANDOFF, ROUND SWAGE, M3X0.5X4.3	06540	21003B-B-0350-28(L4.3)
{82}1	611366	STANDOFF, ROUND SWAGE, M3X0.5X19	06540	21017-B-0350-28

407407 - 160 PIN CONNECTOR KIT W/BACKSHELL

REF DESIG	RACAL INST P/N	DESCRIPTION	FSC	MANUFACTURER'S P/N
{4}1	456437-001	BRACKET, STIFFENER, TOP	21793	456437-001
{5}1	456437-002	BRACKET, STIFFENER, BOTTOM	21793	456437-002
{6}1	456439	STRAIN RELIEF	21793	456439
{7}1	456440	PLATE, SHELL MOUNTING	21793	456440
{10}1	602255-001	HOUSING CABLE, MODIFIED	21793	602255-001
{11}1	602258-116	CONNECTOR, CABLE, RECEPTACLE, 160 PIN	6V439	024070
{12}160	602258-900	TERMINAL, CRIMP, SNAP-IN, 26-20 GA	6V439	014728
{15}2	616252	SCREW, PPH, SEMS ASSY, 4-40X.312	78189	SEMS W/SQ CONE WA.
{16}2	616254	SCREW, PPH, SEMS ASSY., 4-40 X .500	78189	SEMS W/SQ CONE WA.
{20}2	456502	SPONGE, PRESSURE, 1260-38	21793	456502
{24}1	980785	INSTRUCTION SHEET, 160 PIN KIT	21793	980785

407408,407409 - 160 PIN CABLE ASSY, 24G

REF DESIG	RACAL INST P/N	DESCRIPTION	FSC	MANUFACTURER'S P/N
{4}1	456437-001	BRACKET, STIFFENER, TOP	21793	456437-001
{5}1	456437-002	BRACKET, STIFFENER, BOTTOM	21793	456437-002
{6}1	456439	STRAIN RELIEF	21793	456439
{7}1	456440	PLATE, SHELL MOUNTING	21793	456440
{10}1	602255-001	HOUSING CABLE, MODIFIED	21793	602255-001
{11}1	602258-116	CONNECTOR, CABLE, RECEPTACLE, 160 PIN	6V439	024070
{12}160	602258-900	TERMINAL, CRIMP, SNAP-IN, 26-20 GA	6V439	014728
{15}2	616252	SCREW, PPH, SEMS ASSY, 4-40X.312	78189	SEMS W/SQ CONE WA.
{16}1	616254	SCREW, PPH, SEMS ASSY., 4-40 X .500	78189	SEMS W/SQ CONE WA.
{18}A/R	500319	CABLE, 40 CONDUCTOR, 24 GA UNSHIELDED	92194	5020/80C
{19}2	456502	SPONGE, PRESSURE, 1260-38	21793	456502
{22}A/R	M23053/5-109-0	SLEEVING, INSUL. HEAT SHRINK, .75D, CLR	81349	M23053/5-109-0
{24}A/R	M23053/5-109-4	SLEEVING, INSUL. HEAT SHRINK, .75D, YEL	81349	M23053/5-109-4

FSC	SUPPLIER
00779	AMP, INC. HARRISBURG, PA
01121	ALLEN BRADLEY CO. MILWAUKEE, WI
01295	TEXAS INSTRUMENTS, INC. DALLAS, TX
04222	AEROVOX CORP. (HI-Q DIV.) MYRTLE BEACH, SC
04713	MOTOROLA, INC. (SEMICONDUCTOR PRODUCTS DIV.) PHOENIX, AZ
05397	UNION CARBIDE CORP. (MATERIALS SYSTEMS DIV.) CLEVELAND, OH
06540	AMATOM ELECTRONIC HARDWARE NEW ROCHELLE, NY
11236	CTS OF BERNE, INC. BERNE, IN
18324	SIGNETICS, INC. SUNNYVALE, CA
21793	RACAL INSTRUMENTS INC. IRVINE, CA
27014	NATIONAL SEMI-CONDUCTOR CORP. SANTA CLARA, CA
52072	CIRCUIT ASSY. CORP. COSTA MESA, CA
52210	GETTING ENGRG. & MFG. CO. SPRING MILLS, PA
53387	THREE M (3M) CO. ST. PAUL, MN
58730	THOMAS & BETTS CO. ELIZABETH, NJ
60496	MICREL INC. SUNNYVALE, CA
61529	AROMAT CORP. CUPERTINO, CA
62559	SCHROFF, INC. WARWICK, RI
65832	AMERICAN RESEARCH & ENGINEERING ELGIN, IL
6V439	ERNI COMPONENTS INC. RICHMOND, VA
73138	BECKMAN INSTRUMENTS FULLERTON, CA
78189	ILLINOIS TOOL WORKS, INC. (SHAKEPROOF DIV.) ELGIN, IL
91637	DALE ELECTRONICS, INC. COLUMBUS, NE
92194	ALPHA WIRE ELIZABETH, NJ
95275	VITRAMON, INC. BRIDGEPORT, CT

6.0 Optional Harness Assemblies

The following harness assemblies are used to connect Racal Instruments Model 1260-38 to Freedom Series Test Receiver Interfaces.

Each harness documentation consists of an assembly drawing, parts list, system wire list and wire list.

407439 Virginia Panel, Inc. Series VP90 Interface Harness

407440 TTI, Testron, Inc. Interface Harness
(TTI Receiver must be above chassis)

For more information on Racal Instruments complete line of Test Receiver Interface solutions, contact your Sales Representative.

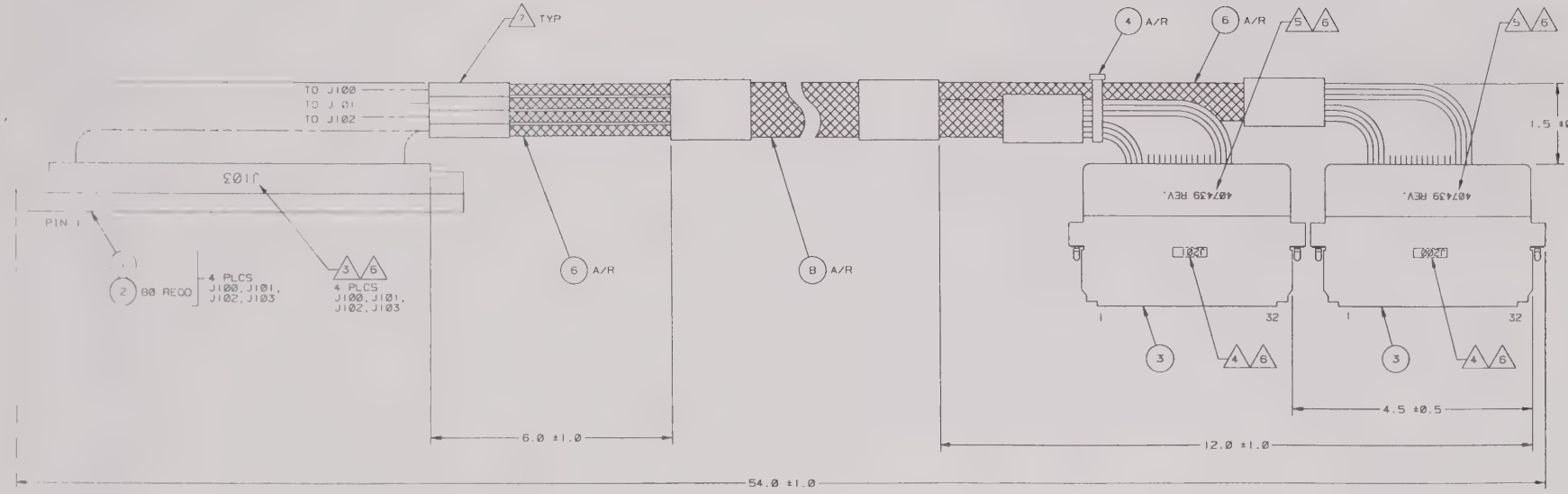

NOTES:

1. TWO CABLE ASSEMBLIES TO BE FORMED:
   - J200 CABLE 1 TO J100
   - J200 CABLE 2 TO J101
   - J201 CABLE 1 TO J102
   - J201 CABLE 2 TO J103

   SEE WIRE LIST FOR CONTACT ASSIGNMENTS AND CONNECTIONS

5. INK STAMP [illegible] APPROXIMATELY WHERE SHOWN

6. INK STAMP J2-- APPROXIMATELY WHERE SHOWN

   INK STAMP 407439 AND LATEST REVISION APPROXIMATELY WHERE SHOWN

   [illegible] COATING AFTER MARKING

7. PLACE APPROPRIATE SIZE SHRINK TUBING OVER ENDS OF BRAID

8. MATING ITA CONNECTORS FOR J100-J103 IS VIRGINIA PANEL P/N 510 108 126. USE WITH ITA PIN P/N 610 110 108.

9. ENCLOSE CABLES IN SINGLE BAG AND IDENTIFY WITH PART NO. AND CURRENT REVISION

PROPRIETARY NOTICE

THIS DOCUMENT AND THE TECHNICAL DATA HEREIN DISCLOSED ARE PROPRIETARY TO RACAL INSTRUMENTS INC. AND SHALL NOT, WITHOUT THE EXPRESS WRITTEN PERMISSION OF RACAL INSTRUMENTS INC. BE USED, RELEASED OR DISCLOSED IN WHOLE OR IN PART, OR USED TO SOLICIT QUOTATIONS FROM A COMPETITIVE SOURCE OR USED FOR MANUFACTURE BY ANYONE OTHER THAN RACAL INSTRUMENTS INC. THE INFORMATION HEREON HAS BEEN DEVELOPED AT PRIVATE EXPENSE, AND MAY ONLY BE USED FOR PURPOSES OF ENGINEERING EVALUATION AND FOR INCORPORATION INTO TECHNICAL SPECIFICATIONS AND OTHER DOCUMENTS WHICH SPECIFY PROCUREMENT OF PRODUCTS FROM RACAL INSTRUMENTS INC.

RACAL Instruments, Inc.
4 Goodyear St., Irvine, CA. 92718-2002

TITLE: HARNESS ASSY, 1260-38, VP90

SIZE	CAGE CODE	DWG NO.	REV
D	21793	407439	B

SCALE NONE | CALC WT | ACT WT | SHEET 1 OF 10

ENGINEERING PARTS LIST

ITEM	REV	PART NO.	DESCRIPTION	QTY	REFERENCE
1		602201-003	CON-RCV-PLG096.---D	4	J100,J101,J102,J103
2		602201-906	CONTACT, SIGNAL, 22AWG, VP90	320	(W/J100,J101,J102,J103)
3		407408	160 PIN CABLE ASSY, 6FT, 24G	2	J200,J201
4		610777	TIE-CA-LKG-.062-.075	A/R	
5		910541	POLYURETHANE CONF. COAT	A/R	
6		GRP-110-1/2	SLEEVING,BRAIDED POLY,1/2	A/R	
7					
8		GRP-110-3/4	SLEEVING,BRAIDED POLY,3/4	A/R	

ENGINEERING WIRE LIST

WIRE	FROM	TO	TYPE	PART #	WIRE LEN	REFERENCE
	BLK AA (J100)	Uxx-SLOT yy (J200)	CABLE	407439		SYSTEM WIRE LIST
	BLK AA (J101)	Uxx-SLOT yy (J200)	CABLE	407439		
	BLK AA (J102)	Uxx-SLOT yy (J201)	CABLE	407439		
	BLK AA (J103)	Uxx-SLOT yy (J201)	CABLE	407439		

This system wirelist serves as a template for incorporating this harness assembly into the overall system wirelist. It does not in any way affect the fabrication of this harness assembly.

DOC. NO. 407439

RACAL Instruments, Inc., 4 Goodyear St., Irvine, CA 92718				
DOCUMENT TITLE	SIZE	CODE NO.	DOCUMENT NO.	REV
HARNESS ASSY, 1260-38, VP90	A	21793	407439	B
	DRN		SHEET 3 of 18	

ENGINEERING WIRE LIST

WIRE	FROM	TO	TYPE	PART #	WIRE LEN	REFERENCE
1	J100-1 602201-906	J200-31a	WHT/BLK ORN/VIO	407408 CABLE 1	54"	0000 HI
2	J100-2 602201-906	J200-32a	WHT/BLK YEL/GRY	407408 CABLE 1	54"	0000 LO
3	J100-3 602201-906	J200-31b	WHT/BLK ORN/GRY	407408 CABLE 1	54"	0001 HI
4	J100-4 602201-906	J200-32b	WHT/BLK GRN/BLU	407408 CABLE 1	54"	0001 LO
5	J100-5 602201-906	J200-31d	WHT/BLK YEL/BLU	407408 CABLE 1	54"	0002 HI
6	J100-6 602201-906	J200-32d	WHT/BLK GRN/GRY	407408 CABLE 1	54"	0002 LO
7	J100-7 602201-906	J200-31e	WHT/BLK YEL/VIO	407408 CABLE 1	54"	0003 HI
8	J100-8 602201-906	J200-32e	WHT/BLK BLU/VIO	407408 CABLE 1	54"	0003 LO
9	J100-9 602201-906	J200-29a	WHT/BLK BRN/VIO	407408 CABLE 1	54"	0004 HI
10	J100-10 602201-906	J200-30a	WHT/BLK RED/VIO	407408 CABLE 1	54"	0004 LO
11	J100-11 602201-906	J200-29b	WHT/BLK BRN/GRY	407408 CABLE 1	54"	0005 HI
12	J100-12 602201-906	J200-30b	WHT/BLK RED/GRY	407408 CABLE 1	54"	0005 LO
13	J100-13 602201-906	J200-29d	WHT/BLK RED/GRN	407408 CABLE 1	54"	0006 HI
14	J100-14 602201-906	J200-30d	WHT/BLK ORN/GRN	407408 CABLE 1	54"	0006 LO
15	J100-15 602201-906	J200-29e	WHT/BLK RED/BLU	407408 CABLE 1	54"	0007 HI
16	J100-16 602201-906	J200-30e	WHT/BLK ORN/BLU	407408 CABLE 1	54"	0007 LO
17	J100-17 602201-906	J200-27a	WHT/GRN VIO	407408 CABLE 1	54"	0010 HI
18	J100-18 602201-906	J200-28a	WHT/BLK BRN/RED	407408 CABLE 1	54"	0010 LO
19	J100-19 602201-906	J200-27b	WHT/GRN GRY	407408 CABLE 1	54"	0011 HI
20	J100-20 602201-906	J200-28b	WHT/BLK BRN/ORN	407408 CABLE 1	54"	0011 LO
21	J100-21 602201-906	J200-27d	WHT/BLU GRY	407408 CABLE 1	54"	0012 HI
22	J100-22 602201-906	J200-28d	WHT/BLK BRN/GRN	407408 CABLE 1	54"	0012 LO
23	J100-23 602201-906	J200-27e	WHT/VIO GRY	407408 CABLE 1	54"	0013 HI
24	J100-24 602201-906	J200-28e	WHT/BLK BRN/BLU	407408 CABLE 1	54"	0013 LO
25	J100-25 602201-906	J200-25a	WHT/ORN YEL	407408 CABLE 1	54"	0014 HI

ENGINEERING WIRE LIST

WIRE	FROM	TO	TYPE	PART #	WIRE LEN	REFERENCE
26	J100-26 602201-906	J200-26a	WHT/YEL GRN	407408 CABLE 1	54"	0014 LO
27	J100-27 602201-906	J200-25b	WHT/ORN GRN	407408 CABLE 1	54"	0015 HI
28	J100-28 602201-906	J200-26b	WHT/YEL BLU	407408 CABLE 1	54"	0015 LO
29	J100-29 602201-906	J200-25d	WHT/ORN VIO	407408 CABLE 1	54"	0016 HI
30	J100-30 602201-906	J200-26d	WHT/YEL GRY	407408 CABLE 1	54"	0016 LO
31	J100-31 602201-906	J200-25e	WHT/ORN GRY	407408 CABLE 1	54"	0017 HI
32	J100-32 602201-906	J200-26e	WHT/GRN BLU	407408 CABLE 1	54"	0017 LO
33	J100-33 602201-906	J200-23a	WHT/BRN GRN	407408 CABLE 1	54"	0020 HI
34	J100-34 602201-906	J200-24a	WHT/RED YEL	407408 CABLE 1	54"	0020 LO
35	J100-35 602201-906	J200-23b	WHT/BRN BLU	407408 CABLE 1	54"	0021 HI
36	J100-36 602201-906	J200-24b	WHT/RED GRN	407408 CABLE 1	54"	0021 LO
37	J100-37 602201-906	J200-23d	WHT/BRN GRY	407408 CABLE 1	54"	0022 HI
38	J100-38 602201-906	J200-24d	WHT/RED VIO	407408 CABLE 1	54"	0022 LO
39	J100-39 602201-906	J200-23e	WHT/RED ORN	407408 CABLE 1	54"	0023 HI
40	J100-40 602201-906	J200-24e	WHT/RED GRY	407408 CABLE 1	54"	0023 LO
41	J100-41 602201-906	J200-21a	WHT/BLK RED	407408 CABLE 1	54"	0024 HI
42	J100-42 602201-906	J200-22a	WHT/BLK VIO	407408 CABLE 1	54"	0024 LO
43	J100-43 602201-906	J200-21b	WHT/BLK ORN	407408 CABLE 1	54"	0025 HI
44	J100-44 602201-906	J200-22b	WHT/BLK GRY	407408 CABLE 1	54"	0025 LO
45	J100-45 602201-906	J200-21d	WHT/BLK GRN	407408 CABLE 1	54"	0026 HI
46	J100-46 602201-906	J200-22d	WHT/BRN ORN	407408 CABLE 1	54"	0026 LO
47	J100-47 602201-906	J200-21e	WHT/BLK BLU	407408 CABLE 1	54"	0027 HI
48	J100-48 602201-906	J200-22e	WHT/BRN YEL	407408 CABLE 1	54"	0027 LO
49	J100-49 602201-906	J200-19a	WHT/BLK	407408 CABLE 1	54"	0030 HI
50	J100-50 602201-906	J200-20a	WHT/GRN	407408 CABLE 1	54"	0030 LO

ENGINEERING WIRE LIST

WIRE	FROM	TO	TYPE	PART #	WIRE LEN	REFERENCE
51	J100-51 602201-906	J200-19b	WHT/BRN	407408 CABLE 1	54"	0031 HI
52	J100-52 602201-906	J200-20b	WHT/BLU	407408 CABLE 1	54"	0031 LO
53	J100-53 602201-906	J200-19d	WHT/ORN	407408 CABLE 1	54"	0032 HI
54	J100-54 602201-906	J200-20d	WHT/GRY	407408 CABLE 1	54"	0032 LO
55	J100-55 602201-906	J200-19e	WHT/YEL	407408 CABLE 1	54"	0033 HI
56	J100-56 602201-906	J200-20e	WHT/BLK BRN	407408 CABLE 1	54"	0033 LO
57	J100-57 602201-906	J200-17a	BLK	407408 CABLE 1	54"	0034 HI
58	J100-58 602201-906	J200-18a	GRN	407408 CABLE 1	54"	0034 LO
59	J100-59 602201-906	J200-17b	BRN	407408 CABLE 1	54"	0035 HI
60	J100-60 602201-906	J200-18b	BLU	407408 CABLE 1	54"	0035 LO
61	J100-61 602201-906	J200-17d	ORN	407408 CABLE 1	54"	0036 HI
62	J100-62 602201-906	J200-18d	GRY	407408 CABLE 1	54"	0036 LO
63	J100-63 602201-906	J200-17e	YEL	407408 CABLE 1	54"	0037 HI
64	J100-64 602201-906	J200-18e	WHT	407408 CABLE 1	54"	0037 LO
65	J100-65 602201-906	J200-31c	WHT/BLK YEL/GRN	407408 CABLE 1	54"	COM00 HI
66	J100-66 602201-906	J200-32c	WHT/BLK GRN/VIO	407408 CABLE 1	54"	COM00 LO
67	J100-67 602201-906	J200-25c	WHT/ORN BLU	407408 CABLE 1	54"	COM01 HI
68	J100-68 602201-906	J200-26c	WHT/YEL VIO	407408 CABLE 1	54"	COM01 LO
69	J100-69 602201-906	J200-23c	WHT/BRN VIO	407408 CABLE 1	54"	COM02 HI
70	J100-70 602201-906	J200-24c	WHT/RED BLU	407408 CABLE 1	54"	COM02 LO
71	J100-71 602201-906	J200-17c	RED	407408 CABLE 1	54"	COM03 HI
72	J100-72 602201-906	J200-18c	VIO	407408 CABLE 1	54"	COM03 LO
73	J100-73 602201-906	J200-27c	WHT/BLU VIO	407408 CABLE 1	54"	COM00R HI
74	J100-74 602201-906	J200-28c	WHT/BLK BRN/YEL	407408 CABLE 1	54"	COM00R LO
75	J100-75 602201-906	J200-19c	WHT/RED	407408 CABLE 1	54"	COM02R HI

ENGINEERING WIRE LIST

WIRE	FROM	TO	TYPE	PART #	WIRE LEN	REFERENCE
76	J100-76 602201-906	J200-20c	WHT/VIO	407408 CABLE 1	54"	COM02R LO
77	J100-77 602201-906	J200-30c	WHT/BLK ORN/YEL	407408 CABLE 1	54"	COM001W
78	J100-78 602201-906	J200-29c	WHT/BLK RED/YEL	407408 CABLE 1	54"	COM001WR
79	J100-79 602201-906	J200-22c	WHT/BRN RED	407408 CABLE 1	54"	COM021W
80	J100-80 602201-906	J200-21c	WHT/BLK YEL	407408 CABLE 1	54"	COM021WR
81 82	J100-81 J100-82	NO CONNECT NO CONNECT				
83 84	J100-83 J100-84	NO CONNECT NO CONNECT				
85 86	J100-85 J100-86	NO CONNECT NO CONNECT				
87 88	J100-87 J100-88	NO CONNECT NO CONNECT				
89 90	J100-89 J100-90	NO CONNECT NO CONNECT				
91 92	J100-91 J100-92	NO CONNECT NO CONNECT				
93 94	J100-93 J100-94	NO CONNECT NO CONNECT				
95 96	J100-95 J100-96	NO CONNECT NO CONNECT				
97	J101-1 602201-906	J200-15a	WHT/BLK ORN/VIO	407408 CABLE 2	54"	0040 HI
98	J101-2 602201-906	J200-16a	WHT/BLK YEL/GRY	407408 CABLE 2	54"	0040 LO
99	J101-3 602201-906	J200-15b	WHT/BLK ORN/GRY	407408 CABLE 2	54"	0041 HI
110	J101-4 602201-906	J200-16b	WHT/BLK GRN/BLU	407408 CABLE 2	54"	0041 LO
101	J101-5 602201-906	J200-15d	WHT/BLK YEL/BLU	407408 CABLE 2	54"	0042 HI
102	J101-6 602201-906	J200-16d	WHT/BLK GRN/GRY	407408 CABLE 2	54"	0042 LO
103	J101-7 602201-906	J200-15e	WHT/BLK YEL/VIO	407408 CABLE 2	54"	0043 HI
104	J101-8 602201-906	J200-16e	WHT/BLK BLU/VIO	407408 CABLE 2	54"	0043 LO
105	J101-9 602201-906	J200-13a	WHT/BLK BRN/VIO	407408 CABLE 2	54"	0044 HI
106	J101-10 602201-906	J200-14a	WHT/BLK RED/VIO	407408 CABLE 2	54"	0044 LO

ENGINEERING WIRE LIST

WIRE	FROM	TO	TYPE	PART #	WIRE LEN	REFERENCE
107	J101-11 602201-906	J200-13b	WHT/BLK BRN/GRY	407408 CABLE 2	54"	0045 HI
108	J101-12 602201-906	J200-14b	WHT/BLK RED/GRY	407408 CABLE 2	54"	0045 LO
109	J101-13 602201-906	J200-13d	WHT/BLK RED/GRN	407408 CABLE 2	54"	0046 HI
100	J101-14 602201-906	J200-14d	WHT/BLK ORN/GRN	407408 CABLE 2	54"	0046 LO
111	J101-15 602201-906	J200-13e	WHT/BLK RED/BLU	407408 CABLE 2	54"	0047 HI
112	J101-16 602201-906	J200-14e	WHT/BLK ORN/BLU	407408 CABLE 2	54"	0047 LO
113	J101-17 602201-906	J200-11a	WHT/GRN VIO	407408 CABLE 2	54"	0050 HI
114	J101-18 602201-906	J200-12a	WHT/BLK BRN/RED	407408 CABLE 2	54"	0050 LO
115	J101-19 602201-906	J200-11b	WHT/GRN GRY	407408 CABLE 2	54"	0051 HI
116	J101-20 602201-906	J200-12b	WHT/BLK BRN/ORN	407408 CABLE 2	54"	0051 LO
117	J101-21 602201-906	J200-11d	WHT/BLU GRY	407408 CABLE 2	54"	0052 HI
118	J101-22 602201-906	J200-12d	WHT/BLK BRN/GRN	407408 CABLE 2	54"	0052 LO
119	J101-23 602201-906	J200-11e	WHT/VIO GRY	407408 CABLE 2	54"	0053 HI
120	J101-24 602201-906	J200-12e	WHT/BLK BRN/BLU	407408 CABLE 2	54"	0053 LO
121	J101-25 602201-906	J200-9a	WHT/ORN YEL	407408 CABLE 2	54"	0054 HI
122	J101-26 602201-906	J200-10a	WHT/YEL GRN	407408 CABLE 2	54"	0054 LO
123	J101-27 602201-906	J200-9b	WHT/ORN GRN	407408 CABLE 2	54"	0055 HI
124	J101-28 602201-906	J200-10b	WHT/YEL BLU	407408 CABLE 2	54"	0055 LO
125	J101-29 602201-906	J200-9d	WHT/ORN VIO	407408 CABLE 2	54"	0056 HI
126	J101-30 602201-906	J200-10d	WHT/YEL GRY	407408 CABLE 2	54"	0056 LO
127	J101-31 602201-906	J200-9e	WHT/ORN GRY	407408 CABLE 2	54"	0057 HI
128	J101-32 602201-906	J200-10e	WHT/GRN BLU	407408 CABLE 2	54"	0057 LO
129	J101-33 602201-906	J200-7a	WHT/BRN GRN	407408 CABLE 2	54"	0060 HI
130	J101-34 602201-906	J200-8a	WHT/RED YEL	407408 CABLE 2	54"	0060 LO
131	J101-35 602201-906	J200-7b	WHT/BRN BLU	407408 CABLE 2	54"	0061 HI

ENGINEERING WIRE LIST

WIRE	FROM	TO	TYPE	PART #	WIRE LEN	REFERENCE
132	J101-36 602201-906	J200-8b	WHT/RED GRN	407408 CABLE 2	54"	0061 LO
133	J101-37 602201-906	J200-7d	WHT/BRN GRY	407408 CABLE 2	54"	0062 HI
134	J101-38 602201-906	J200-8d	WHT/RED VIO	407408 CABLE 2	54"	0062 LO
135	J101-39 602201-906	J200-7e	WHT/RED ORN	407408 CABLE 2	54"	0063 HI
136	J101-40 602201-906	J200-8e	WHT/RED GRY	407408 CABLE 2	54"	0063 LO
137	J101-41 602201-906	J200-5a	WHT/BLK RED	407408 CABLE 2	54"	0064 HI
138	J101-42 602201-906	J200-6a	WHT/BLK VIO	407408 CABLE 2	54"	0064 LO
139	J101-43 602201-906	J200-5b	WHT/BLK ORN	407408 CABLE 2	54"	0065 HI
140	J101-44 602201-906	J200-6b	WHT/BLK GRY	407408 CABLE 2	54"	0065 LO
141	J101-45 602201-906	J200-5d	WHT/BLK GRN	407408 CABLE 2	54"	0066 HI
142	J101-46 602201-906	J200-6d	WHT/BRN ORN	407408 CABLE 2	54"	0066 LO
143	J101-47 602201-906	J200-5e	WHT/BLK BLU	407408 CABLE 2	54"	0067 HI
144	J101-48 602201-906	J200-6e	WHT/BRN YEL	407408 CABLE 2	54"	0067 LO
145	J101-49 602201-906	J200-3a	WHT/BLK	407408 CABLE 2	54"	0070 HI
146	J101-50 602201-906	J200-4a	WHT/GRN	407408 CABLE 2	54"	0070 LO
147	J101-51 602201-906	J200-3b	WHT/BRN	407408 CABLE 2	54"	0071 HI
148	J101-52 602201-906	J200-4b	WHT/BLU	407408 CABLE 2	54"	0071 LO
149	J101-53 602201-906	J200-3d	WHT/ORN	407408 CABLE 2	54"	0072 HI
150	J101-54 602201-906	J200-4d	WHT/GRY	407408 CABLE 2	54"	0072 LO
151	J101-55 602201-906	J200-3e	WHT/YEL	407408 CABLE 2	54"	0073 HI
152	J101-56 602201-906	J200-4e	WHT/BLK BRN	407408 CABLE 2	54"	0073 LO
153	J101-57 602201-906	J200-1a	BLK	407408 CABLE 2	54"	0074 HI
154	J101-58 602201-906	J200-2a	GRN	407408 CABLE 2	54"	0074 LO
155	J101-59 602201-906	J200-1b	BRN	407408 CABLE 2	54"	0075 HI
156	J101-60 602201-906	J200-2b	BLU	407408 CABLE 2	54"	0075 LO

DOC. NO. 407439

RACAL Instruments, Inc., 4 Goodyear St., Irvine, CA 92718

DOCUMENT TITLE	SIZE	CODE NO.	DOCUMENT NO.	REV
HARNESS ASSEMBLY, 1260-38, VP90	A	21793	407439	B
	DRN			SHEET 9 of 18

ENGINEERING WIRE LIST

WIRE	FROM	TO	TYPE	PART #	WIRE LEN	REFERENCE
157	J101-61 602201-906	J200-1d	ORN	407408 CABLE 2	54"	0076 HI
158	J101-62 602201-906	J200-2d	GRY	407408 CABLE 2	54"	0076 LO
159	J101-63 602201-906	J200-1e	YEL	407408 CABLE 2	54"	0077 HI
160	J101-64 602201-906	J200-2e	WHT	407408 CABLE 2	54"	0077 LO
161	J101-65 602201-906	J200-15c	WHT/BLK YEL/GRN	407408 CABLE 2	54"	COM04 HI
162	J101-66 602201-906	J200-16c	WHT/BLK GRN/VIO	407408 CABLE 2	54"	COM04 LO
163	J101-67 602201-906	J200-9c	WHT/ORN BLU	407408 CABLE 2	54"	COM05 HI
164	J101-68 602201-906	J200-10c	WHT/YEL VIO	407408 CABLE 2	54"	COM05 LO
165	J101-69 602201-906	J200-7c	WHT/BRN VIO	407408 CABLE 2	54"	COM06 HI
166	J101-70 602201-906	J200-8c	WHT/RED BLU	407408 CABLE 2	54"	COM06 LO
167	J101-71 602201-906	J200-1c	RED	407408 CABLE 2	54"	COM07 HI
168	J101-72 602201-906	J200-2c	VIO	407408 CABLE 2	54"	COM07 LO
169	J101-73 602201-906	J200-11c	WHT/BLU VIO	407408 CABLE 2	54"	COM04R HI
170	J101-74 602201-906	J200-12c	WHT/BLK BRN/YEL	407408 CABLE 2	54"	COM04R LO
171	J101-75 602201-906	J200-3c	WHT/RED	407408 CABLE 2	54"	COM06R HI
172	J101-76 602201-906	J200-4c	WHT/VIO	407408 CABLE 2	54"	COM06R LO
173	J101-77 602201-906	J200-14c	WHT/BLK ORN/YEL	407408 CABLE 2	54"	COM041W
174	J101-78 602201-906	J200-13c	WHT/BLK RED/YEL	407408 CABLE 2	54"	COM041WR
175	J101-79 602201-906	J200-6c	WHT/BRN RED	407408 CABLE 2	54"	COM061W
176	J101-80 602201-906	J200-5c	WHT/BLK YEL	407408 CABLE 2	54"	COM061WR
177 178	J101-81 J101-82	NO CONNECT NO CONNECT				
179 180	J101-83 J101-84	NO CONNECT NO CONNECT				
181 182	J101-85 J101-86	NO CONNECT NO CONNECT				
183 184	J101-87 J101-88	NO CONNECT NO CONNECT				

ENGINEERING WIRE LIST

WIRE	FROM	TO	TYPE	PART #	WIRE LEN	REFERENCE
185	J101-89	NO CONNECT				
186	J101-90	NO CONNECT				
187	J101-91	NO CONNECT				
188	J101-92	NO CONNECT				
189	J101-93	NO CONNECT				
190	J101-94	NO CONNECT				
191	J101-95	NO CONNECT				
192	J101-96	NO CONNECT				
193	J102-1 602201-906	J201-31a	WHT/BLK ORN/VIO	407408 CABLE 1	54"	0080 HI
194	J102-2 602201-906	J201-32a	WHT/BLK YEL/GRY	407408 CABLE 1	54"	0080 LO
195	J102-3 602201-906	J201-31b	WHT/BLK ORN/GRY	407408 CABLE 1	54"	0081 HI
196	J102-4 602201-906	J201-32b	WHT/BLK GRN/BLU	407408 CABLE 1	54"	0081 LO
197	J102-5 602201-906	J201-31d	WHT/BLK YEL/BLU	407408 CABLE 1	54"	0082 HI
198	J102-6 602201-906	J201-32d	WHT/BLK GRN/GRY	407408 CABLE 1	54"	0082 LO
199	J102-7 602201-906	J201-31e	WHT/BLK YEL/VIO	407408 CABLE 1	54"	0083 HI
200	J102-8 602201-906	J201-32e	WHT/BLK BLU/VIO	407408 CABLE 1	54"	0083 LO
201	J102-9 602201-906	J201-29a	WHT/BLK BRN/VIO	407408 CABLE 1	54"	0084 HI
202	J102-10 602201-906	J201-30a	WHT/BLK RED/VIO	407408 CABLE 1	54"	0084 LO
203	J102-11 602201-906	J201-29b	WHT/BLK BRN/GRY	407408 CABLE 1	54"	0085 HI
204	J102-12 602201-906	J201-30b	WHT/BLK RED/GRY	407408 CABLE 1	54"	0085 LO
205	J102-13 602201-906	J201-29d	WHT/BLK RED/GRN	407408 CABLE 1	54"	0086 HI
206	J102-14 602201-906	J201-30d	WHT/BLK ORN/GRN	407408 CABLE 1	54"	0086 LO
207	J102-15 602201-906	J201-29e	WHT/BLK RED/BLU	407408 CABLE 1	54"	0087 HI
208	J102-16 602201-906	J201-30e	WHT/BLK ORN/BLU	407408 CABLE 1	54"	0087 LO
209	J102-17 602201-906	J201-27a	WHT/GRN VIO	407408 CABLE 1	54"	0090 HI
210	J102-18 602201-906	J201-28a	WHT/BLK BRN/RED	407408 CABLE 1	54"	0090 LO
211	J102-19 602201-906	J201-27b	WHT/GRN GRY	407408 CABLE 1	54"	0091 HI
212	J102-20 602201-906	J201-28b	WHT/BLK BRN/ORN	407408 CABLE 1	54"	0091 LO

DOC. NO. 407439

RACAL Instruments, Inc., 4 Goodyear St., Irvine, CA 92718

DOCUMENT TITLE	SIZE	CODE NO.	DOCUMENT NO.	REV
HARNESS ASSEMBLY, 1260-38, VP90	A	21793	407439	B
	DRN			SHEET 11 of 18

ENGINEERING WIRE LIST

WIRE	FROM	TO	TYPE	PART #	WIRE LEN	REFERENCE
213	J102-21 602201-906	J201-27d	WHT/BLU GRY	407408 CABLE 1	54"	0092 HI
214	J102-22 602201-906	J201-28d	WHT/BLK BRN/GRN	407408 CABLE 1	54"	0092 LO
215	J102-23 602201-906	J201-27e	WHT/VIO GRY	407408 CABLE 1	54"	0093 HI
216	J102-24 602201-906	J201-28e	WHT/BLK BRN/BLU	407408 CABLE 1	54"	0093 LO
217	J102-25 602201-906	J201-25a	WHT/ORN YEL	407408 CABLE 1	54"	0094 HI
218	J102-26 602201-906	J201-26a	WHT/YEL GRN	407408 CABLE 1	54"	0094 LO
219	J102-27 602201-906	J201-25b	WHT/ORN GRN	407408 CABLE 1	54"	0095 HI
220	J102-28 602201-906	J201-26b	WHT/YEL BLU	407408 CABLE 1	54"	0095 LO
221	J102-29 602201-906	J201-25d	WHT/ORN VIO	407408 CABLE 1	54"	0096 HI
222	J102-30 602201-906	J201-26d	WHT/YEL GRY	407408 CABLE 1	54"	0096 LO
223	J102-31 602201-906	J201-25e	WHT/ORN GRY	407408 CABLE 1	54"	0097 HI
224	J102-32 602201-906	J201-26e	WHT/GRN BLU	407408 CABLE 1	54"	0097 LO
225	J102-33 602201-906	J201-23a	WHT/BRN GRN	407408 CABLE 1	54"	0100 HI
226	J102-34 602201-906	J201-24a	WHT/RED YEL	407408 CABLE 1	54"	0100 LO
227	J102-35 602201-906	J201-23b	WHT/BRN BLU	407408 CABLE 1	54"	0101 HI
228	J102-36 602201-906	J201-24b	WHT/RED GRN	407408 CABLE 1	54"	0101 LO
229	J102-37 602201-906	J201-23d	WHT/BRN GRY	407408 CABLE 1	54"	0102 HI
230	J102-38 602201-906	J201-24d	WHT/RED VIO	407408 CABLE 1	54"	0102 LO
231	J102-39 602201-906	J201-23e	WHT/RED ORN	407408 CABLE 1	54"	0103 HI
232	J102-40 602201-906	J201-24e	WHT/RED GRY	407408 CABLE 1	54"	0103 LO
233	J102-41 602201-906	J201-21a	WHT/BLK RED	407408 CABLE 1	54"	0104 HI
234	J102-42 602201-906	J201-22a	WHT/BLK VIO	407408 CABLE 1	54"	0104 LO
235	J102-43 602201-906	J201-21b	WHT/BLK ORN	407408 CABLE 1	54"	0105 HI
236	J102-44 602201-906	J201-22b	WHT/BLK GRY	407408 CABLE 1	54"	0105 LO
237	J102-45 602201-906	J201-21d	WHT/BLK GRN	407408 CABLE 1	54"	0106 HI

ENGINEERING WIRE LIST

WIRE	FROM	TO	TYPE	PART #	WIRE LEN	REFERENCE
238	J102-46 602201-906	J201-22d	WHT/BRN ORN	407408 CABLE 1	54"	0106 LO
239	J102-47 602201-906	J201-21e	WHT/BLK BLU	407408 CABLE 1	54"	0107 HI
240	J102-48 602201-906	J201-22e	WHT/BRN YEL	407408 CABLE 1	54"	0107 LO
241	J102-49 602201-906	J201-19a	WHT/BLK	407408 CABLE 1	54"	0110 HI
242	J102-50 602201-906	J201-20a	WHT/GRN	407408 CABLE 1	54"	0110 LO
243	J102-51 602201-906	J201-19b	WHT/BRN	407408 CABLE 1	54"	0111 HI
244	J102-52 602201-906	J201-20b	WHT/BLU	407408 CABLE 1	54"	0111 LO
245	J102-53 602201-906	J201-19d	WHT/ORN	407408 CABLE 1	54"	0112 HI
246	J102-54 602201-906	J201-20d	WHT/GRY	407408 CABLE 1	54"	0112 LO
247	J102-55 602201-906	J201-19e	WHT/YEL	407408 CABLE 1	54"	0113 HI
248	J102-56 602201-906	J201-20e	WHT/BLK BRN	407408 CABLE 1	54"	0113 LO
249	J102-57 602201-906	J201-17a	BLK	407408 CABLE 1	54"	0114 HI
250	J102-58 602201-906	J201-18a	GRN	407408 CABLE 1	54"	0114 LO
251	J102-59 602201-906	J201-17b	BRN	407408 CABLE 1	54"	0115 HI
252	J102-60 602201-906	J201-18b	BLU	407408 CABLE 1	54"	0115 LO
253	J102-61 602201-906	J201-17d	ORN	407408 CABLE 1	54"	0116 HI
254	J102-62 602201-906	J201-18d	GRY	407408 CABLE 1	54"	0116 LO
255	J102-63 602201-906	J201-17e	YEL	407408 CABLE 1	54"	0117 HI
256	J102-64 602201-906	J201-18e	WHT	407408 CABLE 1	54"	0117 LO
257	J102-65 602201-906	J201-31c	WHT/BLK YEL/GRN	407408 CABLE 1	54"	COM08 HI
258	J102-66 602201-906	J201-32c	WHT/BLK GRN/VIO	407408 CABLE 1	54"	COM08 LO
259	J102-67 602201-906	J201-25c	WHT/ORN BLU	407408 CABLE 1	54"	COM09 HI
260	J102-68 602201-906	J201-26c	WHT/YEL VIO	407408 CABLE 1	54"	COM09 LO
261	J102-69 602201-906	J201-23c	WHT/BRN VIO	407408 CABLE 1	54"	COM10 HI
262	J102-70 602201-906	J201-24c	WHT/RED BLU	407408 CABLE 1	54"	COM10 LO

DOC. NO. 407439

RACAL Instruments, Inc., 4 Goodyear St., Irvine, CA 92718

DOCUMENT TITLE	SIZE	CODE NO.	DOCUMENT NO.	REV
HARNESS ASSEMBLY, 1260-38, VP90	A	21793	407439	B
	DRN		SHEET 13 of 18	

ENGINEERING WIRE LIST

WIRE	FROM	TO	TYPE	PART #	WIRE LEN	REFERENCE
263	J102-71 602201-906	J201-17c	RED	407408 CABLE 1	54"	COM11 HI
264	J102-72 602201-906	J201-18c	VIO	407408 CABLE 1	54"	COM11 LO
265	J102-73 602201-906	J201-27c	WHT/BLU VIO	407408 CABLE 1	54"	COM08R HI
266	J102-74 602201-906	J201-28c	WHT/BLK BRN/YEL	407408 CABLE 1	54"	COM08R LO
267	J102-75 602201-906	J201-19c	WHT/RED	407408 CABLE 1	54"	COM10R HI
268	J102-76 602201-906	J201-20c	WHT/VIO	407408 CABLE 1	54"	COM10R LO
269	J102-77 602201-906	J201-30c	WHT/BLK ORN/YEL	407408 CABLE 1	54"	COM081W
270	J102-78 602201-906	J201-29c	WHT/BLK RED/YEL	407408 CABLE 1	54"	COM081WR
271	J102-79 602201-906	J201-22c	WHT/BRN RED	407408 CABLE 1	54"	COM101W
272	J102-80 602201-906	J201-21c	WHT/BLK YEL	407408 CABLE 1	54"	COM101WR
273 274	J102-81 J102-82	NO CONNECT NO CONNECT				
275 276	J102-83 J102-84	NO CONNECT NO CONNECT				
277 278	J102-85 J102-86	NO CONNECT NO CONNECT				
279 280	J102-87 J102-88	NO CONNECT NO CONNECT				
281 282	J102-89 J102-90	NO CONNECT NO CONNECT				
283 284	J102-91 J102-92	NO CONNECT NO CONNECT				
285 286	J102-93 J102-94	NO CONNECT NO CONNECT				
287 288	J102-95 J102-96	NO CONNECT NO CONNECT				
289	J103-1 602201-906	J201-15a	WHT/BLK ORN/VIO	407408 CABLE 2	54"	0120 HI
290	J103-2 602201-906	J201-16a	WHT/BLK YEL/GRY	407408 CABLE 2	54"	0120 LO
291	J103-3 602201-906	J201-15b	WHT/BLK ORN/GRY	407408 CABLE 2	54"	0121 HI
292	J103-4 602201-906	J201-16b	WHT/BLK GRN/BLU	407408 CABLE 2	54"	0121 LO
293	J103-5 602201-906	J201-15d	WHT/BLK YEL/BLU	407408 CABLE 2	54"	0122 HI

ENGINEERING WIRE LIST

WIRE	FROM	TO	TYPE	PART #	WIRE LEN	REFERENCE
294	J103-6 602201-906	J201-16d	WHT/BLK GRN/GRY	407408 CABLE 2	54"	0122 LO
295	J103-7 602201-906	J201-15e	WHT/BLK YEL/VIO	407408 CABLE 2	54"	0123 HI
296	J103-8 602201-906	J201-16e	WHT/BLK BLU/VIO	407408 CABLE 2	54"	0123 LO
297	J103-9 602201-906	J201-13a	WHT/BLK BRN/VIO	407408 CABLE 2	54"	0124 HI
298	J103-10 602201-906	J201-14a	WHT/BLK RED/VIO	407408 CABLE 2	54"	0124 LO
299	J103-11 602201-906	J201-13b	WHT/BLK BRN/GRY	407408 CABLE 2	54"	0125 HI
300	J103-12 602201-906	J201-14b	WHT/BLK RED/GRY	407408 CABLE 2	54"	0125 LO
301	J103-13 602201-906	J201-13d	WHT/BLK RED/GRN	407408 CABLE 2	54"	0126 HI
302	J103-14 602201-906	J201-14d	WHT/BLK ORN/GRN	407408 CABLE 2	54"	0126 LO
303	J103-15 602201-906	J201-13e	WHT/BLK RED/BLU	407408 CABLE 2	54"	0127 HI
304	J103-16 602201-906	J201-14e	WHT/BLK ORN/BLU	407408 CABLE 2	54"	0127 LO
305	J103-17 602201-906	J201-11a	WHT/GRN VIO	407408 CABLE 2	54"	0130 HI
306	J103-18 602201-906	J201-12a	WHT/BLK BRN/RED	407408 CABLE 2	54"	0130 LO
307	J103-19 602201-906	J201-11b	WHT/GRN GRY	407408 CABLE 2	54"	0131 HI
308	J103-20 602201-906	J201-12b	WHT/BLK BRN/ORN	407408 CABLE 2	54"	0131 LO
309	J103-21 602201-906	J201-11d	WHT/BLU GRY	407408 CABLE 2	54"	0132 HI
310	J103-22 602201-906	J201-12d	WHT/BLK BRN/GRN	407408 CABLE 2	54"	0132 LO
311	J103-23 602201-906	J201-11e	WHT/VIO GRY	407408 CABLE 2	54"	0133 HI
312	J103-24 602201-906	J201-12e	WHT/BLK BRN/BLU	407408 CABLE 2	54"	0133 LO
313	J103-25 602201-906	J201-9a	WHT/ORN YEL	407408 CABLE 2	54"	0134 HI
314	J103-26 602201-906	J201-10a	WHT/YEL GRN	407408 CABLE 2	54"	0134 LO
315	J103-27 602201-906	J201-9b	WHT/ORN GRN	407408 CABLE 2	54"	0135 HI
316	J103-28 602201-906	J201-10b	WHT/YEL BLU	407408 CABLE 2	54"	0135 LO
317	J103-29 602201-906	J201-9d	WHT/ORN VIO	407408 CABLE 2	54"	0136 HI
318	J103-30 602201-906	J201-10d	WHT/YEL GRY	407408 CABLE 2	54"	0136 LO

ENGINEERING WIRE LIST

WIRE	FROM	TO	TYPE	PART #	WIRE LEN	REFERENCE
319	J103-31 602201-906	J201-9e	WHT/ORN GRY	407408 CABLE 2	54"	0137 HI
320	J103-32 602201-906	J201-10e	WHT/GRN BLU	407408 CABLE 2	54"	0137 LO
321	J103-33 602201-906	J201-7a	WHT/BRN GRN	407408 CABLE 2	54"	0140 HI
322	J103-34 602201-906	J201-8a	WHT/RED YEL	407408 CABLE 2	54"	0140 LO
323	J103-35 602201-906	J201-7b	WHT/BRN BLU	407408 CABLE 2	54"	0141 HI
324	J103-36 602201-906	J201-8b	WHT/RED GRN	407408 CABLE 2	54"	0141 LO
325	J103-37 602201-906	J201-7d	WHT/BRN GRY	407408 CABLE 2	54"	0142 HI
326	J103-38 602201-906	J201-8d	WHT/RED VIO	407408 CABLE 2	54"	0142 LO
327	J103-39 602201-906	J201-7e	WHT/RED ORN	407408 CABLE 2	54"	0143 HI
328	J103-40 602201-906	J201-8e	WHT/RED GRY	407408 CABLE 2	54"	0143 LO
329	J103-41 602201-906	J201-5a	WHT/BLK RED	407408 CABLE 2	54"	0144 HI
330	J103-42 602201-906	J201-6a	WHT/BLK VIO	407408 CABLE 2	54"	0144 LO
331	J103-43 602201-906	J201-5b	WHT/BLK ORN	407408 CABLE 2	54"	0145 HI
332	J103-44 602201-906	J201-6b	WHT/BLK GRY	407408 CABLE 2	54"	0145 LO
333	J103-45 602201-906	J201-5d	WHT/BLK GRN	407408 CABLE 2	54"	0146 HI
334	J103-46 602201-906	J201-6d	WHT/BRN ORN	407408 CABLE 2	54"	0146 LO
335	J103-47 602201-906	J201-5e	WHT/BLK BLU	407408 CABLE 2	54"	0147 HI
336	J103-48 602201-906	J201-6e	WHT/BRN YEL	407408 CABLE 2	54"	0147 LO
337	J103-49 602201-906	J201-3a	WHT/BLK	407408 CABLE 2	54"	0150 HI
338	J103-50 602201-906	J201-4a	WHT/GRN	407408 CABLE 2	54"	0150 LO
339	J103-51 602201-906	J201-3b	WHT/BRN	407408 CABLE 2	54"	0151 HI
340	J103-52 602201-906	J201-4b	WHT/BLU	407408 CABLE 2	54"	0151 LO
341	J103-53 602201-906	J201-3d	WHT/ORN	407408 CABLE 2	54"	0152 HI
342	J103-54 602201-906	J201-4d	WHT/GRY	407408 CABLE 2	54"	0152 LO
343	J103-55 602201-906	J201-3e	WHT/YEL	407408 CABLE 2	54"	0153 HI

ENGINEERING WIRE LIST

WIRE	FROM	TO	TYPE	PART #	WIRE LEN	REFERENCE
344	J103-56 602201-906	J201-4e	WHT/BLK BRN	407408 CABLE 2	54"	0153 LO
345	J103-57 602201-906	J201-1a	BLK	407408 CABLE 2	54"	0154 HI
346	J103-58 602201-906	J201-2a	GRN	407408 CABLE 2	54"	0154 LO
347	J103-59 602201-906	J201-1b	BRN	407408 CABLE 2	54"	0155 HI
348	J103-60 602201-906	J201-2b	BLU	407408 CABLE 2	54"	0155 LO
349	J103-61 602201-906	J201-1d	ORN	407408 CABLE 2	54"	0156 HI
350	J103-62 602201-906	J201-2d	GRY	407408 CABLE 2	54"	0156 LO
351	J103-63 602201-906	J201-1e	YEL	407408 CABLE 2	54"	0157 HI
352	J103-64 602201-906	J201-2e	WHT	407408 CABLE 2	54"	0157 LO
353	J103-65 602201-906	J201-15c	WHT/BLK YEL/GRN	407408 CABLE 2	54"	COM12 HI
354	J103-66 602201-906	J201-16c	WHT/BLK GRN/VIO	407408 CABLE 2	54"	COM12 LO
355	J103-67 602201-906	J201-9c	WHT/ORN BLU	407408 CABLE 2	54"	COM13 HI
356	J103-68 602201-906	J201-10c	WHT/YEL VIO	407408 CABLE 2	54"	COM13 LO
357	J103-69 602201-906	J201-7c	WHT/BRN VIO	407408 CABLE 2	54"	COM14 HI
358	J103-70 602201-906	J201-8c	WHT/RED BLU	407408 CABLE 2	54"	COM14 LO
359	J103-71 602201-906	J201-1c	RED	407408 CABLE 2	54"	COM15 HI
360	J103-72 602201-906	J201-2c	VIO	407408 CABLE 2	54"	COM15 LO
361	J103-73 602201-906	J201-11c	WHT/BLU VIO	407408 CABLE 2	54"	COM12R HI
362	J103-74 602201-906	J201-12c	WHT/BLK BRN/YEL	407408 CABLE 2	54"	COM12R LO
363	J103-75 602201-906	J201-3c	WHT/RED	407408 CABLE 2	54"	COM14R HI
364	J103-76 602201-906	J201-4c	WHT/VIO	407408 CABLE 2	54"	COM14R LO
365	J103-77 602201-906	J201-14c	WHT/BLK ORN/YEL	407408 CABLE 2	54"	COM121W
366	J103-78 602201-906	J201-13c	WHT/BLK RED/YEL	407408 CABLE 2	54"	COM121WR
367	J103-79 602201-906	J201-6c	WHT/BRN RED	407408 CABLE 2	54"	COM141W
368	J103-80 602201-906	J201-5c	WHT/BLK YEL	407408 CABLE 2	54"	COM141WR

RACAL Instruments, Inc., 4 Goodyear St., Irvine, CA 92718

DOCUMENT TITLE	SIZE	CODE NO.	DOCUMENT NO.	REV
HARNESS ASSEMBLY, 1260-38, VP90	A	21793	407439	B
	DRN		SHEET 17 of 18	

DOC. NO. 407439

ENGINEERING WIRE LIST

WIRE	FROM	TO	TYPE	PART #	WIRE LEN	REFERENCE
369	J103-81	NO CONNECT				
370	J103-82	NO CONNECT				
371	J103-83	NO CONNECT				
372	J103-84	NO CONNECT				
373	J103-85	NO CONNECT				
374	J103-86	NO CONNECT				
375	J103-87	NO CONNECT				
376	J103-88	NO CONNECT				
377	J103-89	NO CONNECT				
378	J103-90	NO CONNECT				
379	J103-91	NO CONNECT				
380	J103-92	NO CONNECT				
381	J103-93	NO CONNECT				
382	J103-94	NO CONNECT				
383	J103-95	NO CONNECT				
384	J103-96	NO CONNECT				

ENGINEERING PARTS LIST

ITEM	REV	PART NO.	DESCRIPTION	QTY	REFERENCE
1		602193-010	CON-CAB-RCP010C.100S	32	J100-J131
2		602199-001	CONTACT,CRIMP,RECPT,28-22GA	320	(J100-J131)
3		407408	160 PIN CABLE ASSY, 6FT, 24G	2	
4		610777	TIE-CA-LKG-.062-.075	A/R	
5		910541	POLYURETHANE CONF. COAT	A/R	
6		GRP-110-3/4	SLEEVING,BRAIDED POLY,3/4	A/R	

DOC. NO. 407440

RACAL Instruments, Inc., 4 Goodyear St., Irvine, CA 92718

DOCUMENT TITLE	SIZE	CODE NO.	DOCUMENT NO.	REV
HARNESS ASSEMBLY, 1260-38, TTI	A	21793	407440	C
	DRN		SHEET 2 of 19	

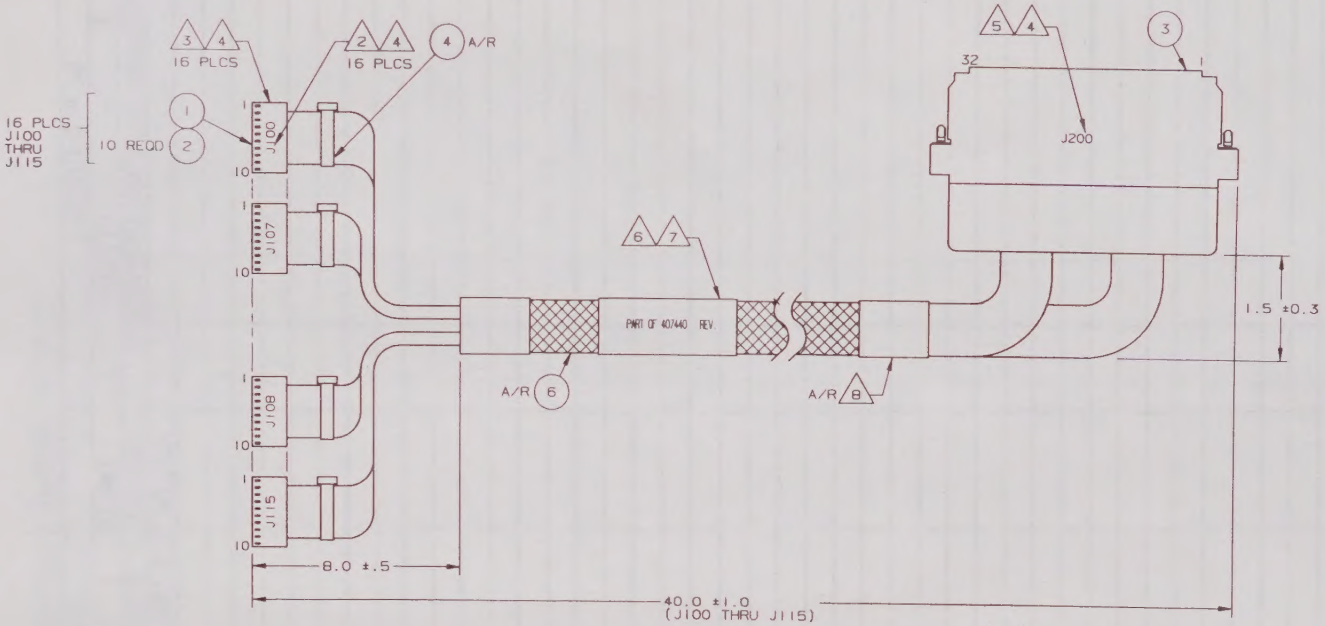

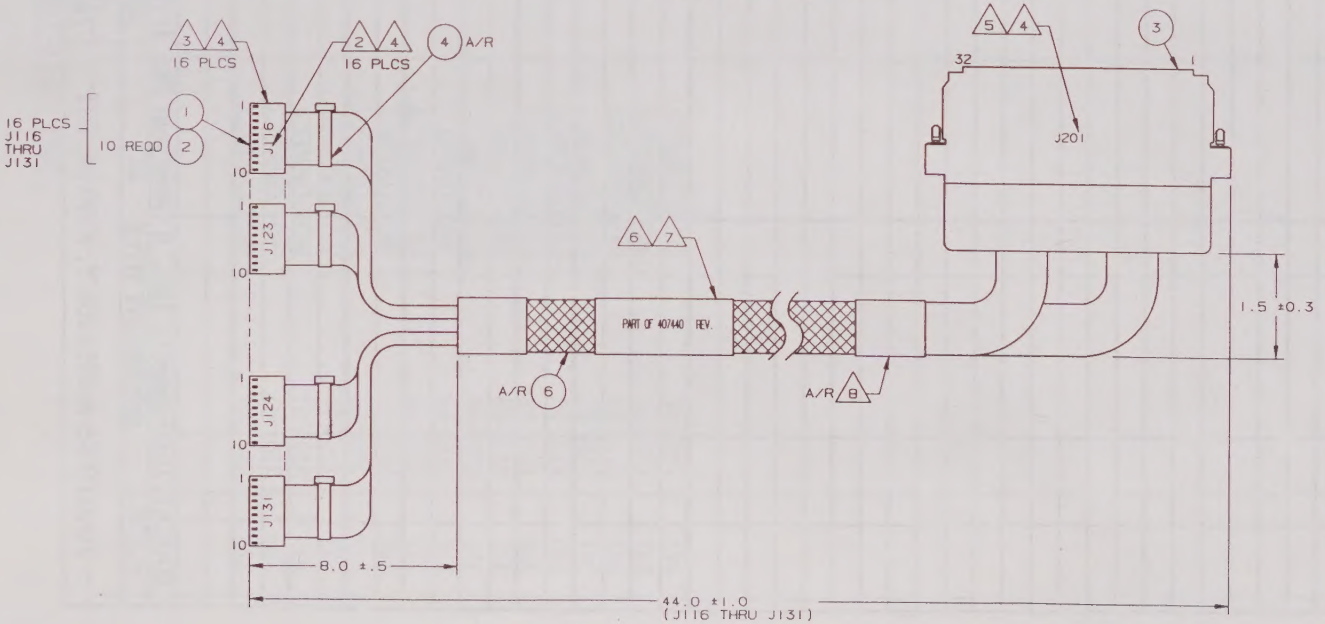

NOTES:

1. SEE WIRE LIST FOR CONTACT ASSIGNMENTS AND CONNECTIONS.
2. INK STAMP J--- APPROXIMATELY WHERE SHOWN.
3. INK STAMP PIN 1 ON END OF J--- WHERE SHOWN.
4. SPRAY PROTECTIVE COATING (ITEM 5) AFTER MARKING.
5. INK STAMP J2-- APPROXIMATELY WHERE SHOWN.
6. MARK "PART OF 407440 AND LATEST REVISION" ON APPROPRIATE SIZE SHRINK TUBING APPROXIMATELY WHERE SHOWN.
7. PLACE APPROPRIATE SIZE CLEAR SHRINK TUBING OVER MARKING.
8. PLACE APPROPRIATE SIZE SHRINK TUBING OVER ENDS OF BRAID.
9. CONNECTORS J100-J131 WILL LATER CONNECT TO RECEIVER BLOCK, TTI P/N VGRCB-170H-R. MATING ITA CONNECTOR BLOCK IS TTI P/N VGFCB-170.
10. ENCLOSE CABLES IN SINGLE BAG AND IDENTIFY WITH PART NUMBER AND CURRENT REVISION.

PROPRIETARY NOTICE

THIS DOCUMENT AND THE TECHNICAL DATA HEREIN DISCLOSED ARE PROPRIETARY TO RACAL INSTRUMENTS INC. AND SHALL NOT, WITHOUT THE EXPRESS WRITTEN PERMISSION OF RACAL INSTRUMENTS INC. BE USED, RELEASED OR DISCLOSED IN WHOLE OR IN PART, OR USED TO SOLICIT QUOTATIONS FROM A COMPETITIVE SOURCE OR USED FOR MANUFACTURE BY ANYONE OTHER THAN RACAL INSTRUMENTS INC. THE INFORMATION HEREON HAS BEEN DEVELOPED AT PRIVATE EXPENSE, AND MAY ONLY BE USED FOR PURPOSES OF ENGINEERING EVALUATION AND FOR INCORPORATION INTO TECHNICAL SPECIFICATIONS AND OTHER DOCUMENTS WHICH SPECIFY PROCUREMENT OF PRODUCTS FROM RACAL INSTRUMENTS INC.

RACAL Instruments, Inc.			
4 Goodyear St., Irvine, CA. 92718-2002			
TITLE: HARNESS ASSY, 1260-38, TTI			
SIZE: D	CAGE CODE: 21793	DWG NO.: 407440	REV.: C
SCALE: NONE	CALC. WT	ACT. WT	SHEET 1 OF 19

Racal Instruments
Racal Instruments 1255/1255A
GPIB Switching System
WIN95/WINNT Frameworks
Disk 1 of 3
To install: In the Program Manager from the File menu select the Run option. Enter [drive]:\setup.exe. Press enter. Follow the instructions from the installation program.
Driver Revision 3.1
WIN95/WINNT FW Revision 4.0
© Copyright 1997 Racal Instruments, Inc. All rights reserved.
Racal Instruments
http://www.racalinst.com
RACAL
1.44 MB
3M
High Density
Haute densite
IBM
Formatted
Formatee
Racal Instruments
Racal Instruments 1255/1255A
GPIB Switching System
WIN95/WINNT Frameworks
Disk 3 of 3
To install: In the Program Manager from the File menu select the Run option. Enter [drive]:\setup.exe. Press enter. Follow the instructions from the installation program.
Driver Revision 3.1
WIN95/WINNT FW Revision 4.0
© Copyright 1997 Racal Instruments, Inc. All rights reserved.
Racal Instruments
http://www.racalinst.com
RACAL

MP MASTER
MA33380